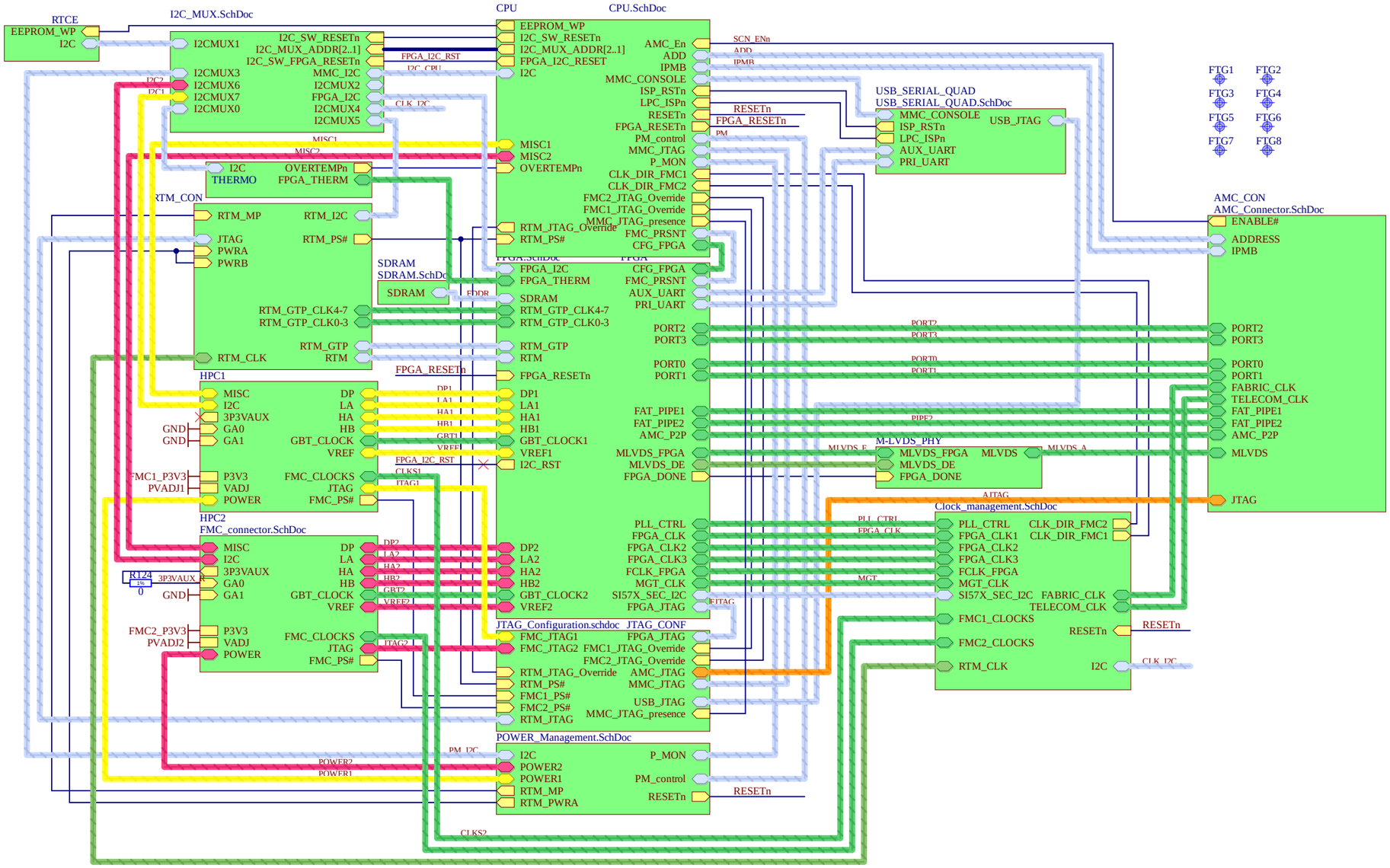

Copyright CNPEM 2013, WUT ISE 2020

This documentation describes Open Hardware and is licensed under CERN OHL v.1.1. You may redistribute and modify this documentation under the terms of the CERN OHL v1.1. (http://ohwr.org/CERNOHL). This documentation is dristributed WITHOUT ANY EXPRESS OR IMPLIED WARRANTY, INCLUDING OF MERCHANTABLITY, SATISFACTORY QUALITY AND FITNESS FOR A PARTICULAR PURPOSE. Please see the CERN OHL v.1.1 for applicable conditions

Project/Equipment	AMC FMC Carrier		
Document	***AMC FMC Carrier v4 Top***	Designer	T.Przywozki
		Drawn by	* XX/XX/XXXX
		Check.by	* -
		Last Mod.	M. Biernat 27.11.2024
		File	AMC_FMC_Carrier.SchDoc
		Print Date	24.10.2025 13:06:32 Sheet 1 of 29
Warsaw University of Technology *Nowowiejska 15/19 00-665 Warsaw*	***ISE***	Contact:	t.przywozki@gmail.com
		Size	A3
		Rev	4.0.3

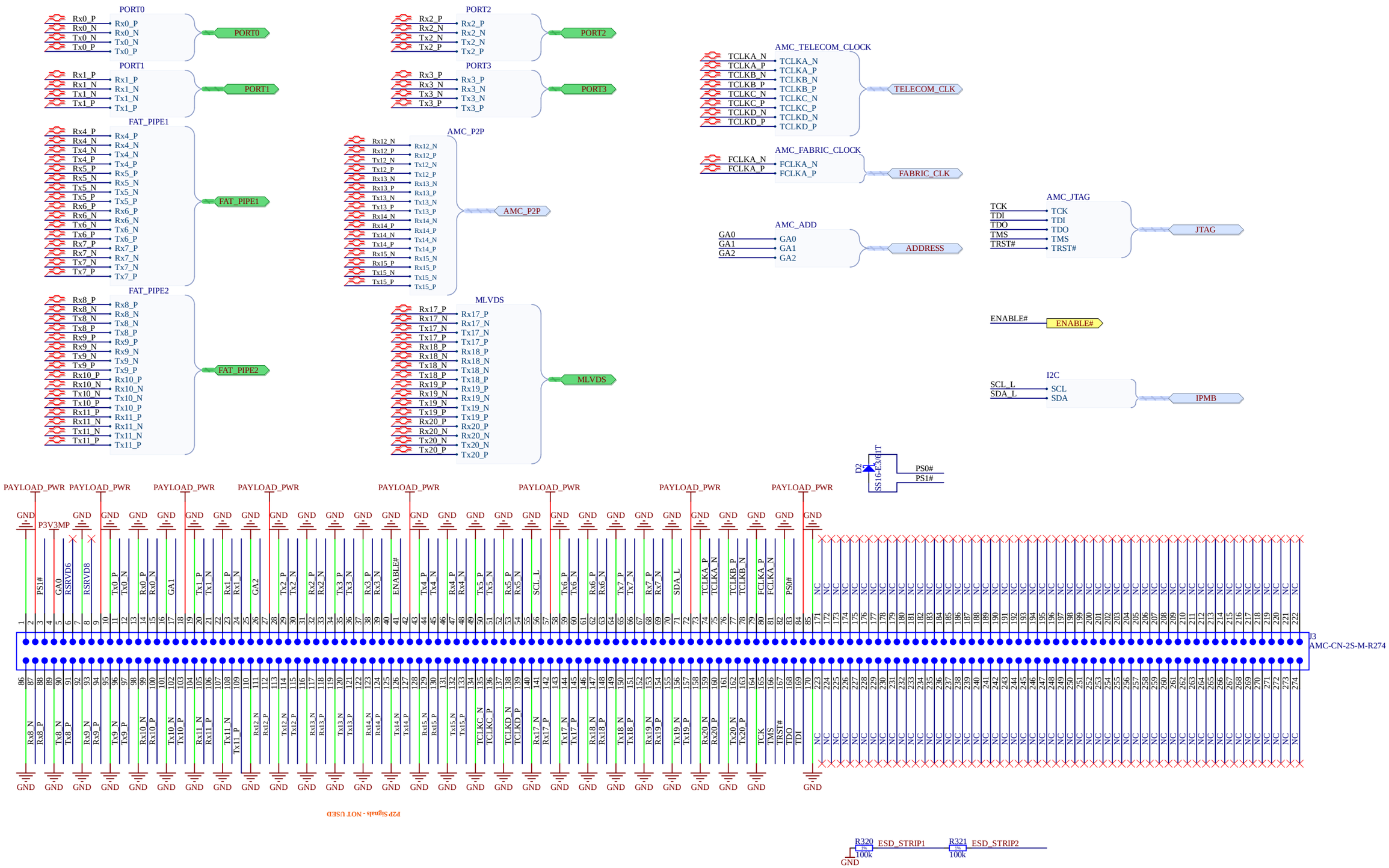

Copyright CNPEM 2013, WUT ISE 2020

This documentation describes Open Hardware and is licensed under CERN OHL v.1.1. You may redistribute and modify this documentaction under the terms of the CERN OHL v1.1. (http://ohwr.org/CERNOHL). This documentation is dristributed WITHOUT ANY EXPRESS OR IMPLIED WARRANTY, INCLUDING OF MERCHANTABLITY, SATISFACTORY QUALITY AND FITNESS FOR A PARTICULAR PURPOSE. Please see the CERN OHL v.1.1 for applicable conditions

- Dimensions are in MM, nominal values used
- Component height rule derived from AMC Base Specification.PDF, Page 62
- The two corners of outline near the edge-connector are approximated, see AMC Base Specification.PDF, Page 59
- Stackup is not specified in AMC Base Specification.PDF or implemented in this template.

Project/Equipment	AMC FMC Carrier		
Document	**AMC FMC Carrier v4** **AMC connector**	Designer	T.Przywozki
		Drawn by	* XX/XX/XXXX
		Check.by	* -
		Last Mod.	F. Switakowski 14.11.2024
		File	AMC_Connector.SchDoc
		Print Date	24.10.2025 13:06:32 Sheet 2 of 29
	Warsaw University of Technology *ISE* *Nowowiejska 15/19 00-665 Warsaw*	Contact:	t.przywozki@gmail.com
		Size	A3
		Rev	1

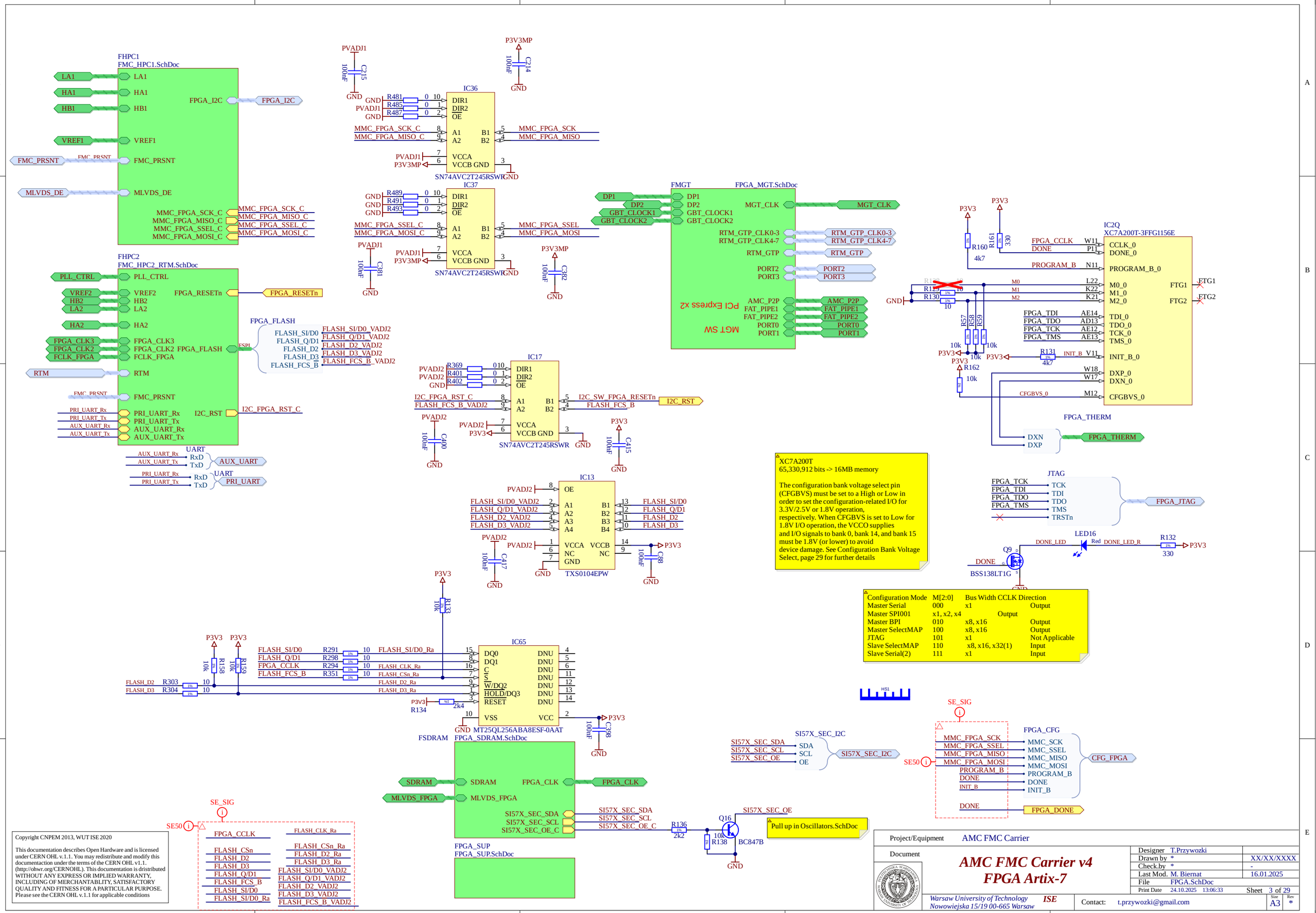

Copyright CNPEM 2013, WUT ISE 2020

This documentation describes Open Hardware and is licensed under CERN OHL v.1.1. You may redistribute and modify this documentation under the terms of the CERN OHL v1.1. (http://ohwr.org/CERNOHL). This documentation is distributed WITHOUT ANY EXPRESS OR IMPLIED WARRANTY, INCLUDING OF MERCHANTABLITY, SATISFACTORY QUALITY AND FITNESS FOR A PARTICULAR PURPOSE. Please see the CERN OHL v.1.1 for applicable conditions

Project/Equipment: AMC FMC Carrier

Document: **AMC FMC Carrier v4 FPGA Artix-7**

Designer	T.Przywozki	
Drawn by	*	XX/XX/XXXX
Check.by	*	-
Last Mod.	M. Biernat	16.01.2025
File	FPGA.SchDoc	
Print Date	24.10.2025 13:06:33	Sheet 3 of 29

Warsaw University of Technology
Nowowiejska 15/19 00-665 Warsaw
ISE
Contact: t.przywozki@gmail.com

Size A3 Rev *

VCCINT

1x680uF, 2x100uF, 28x4.7uF

42x0.47uF on PG.34

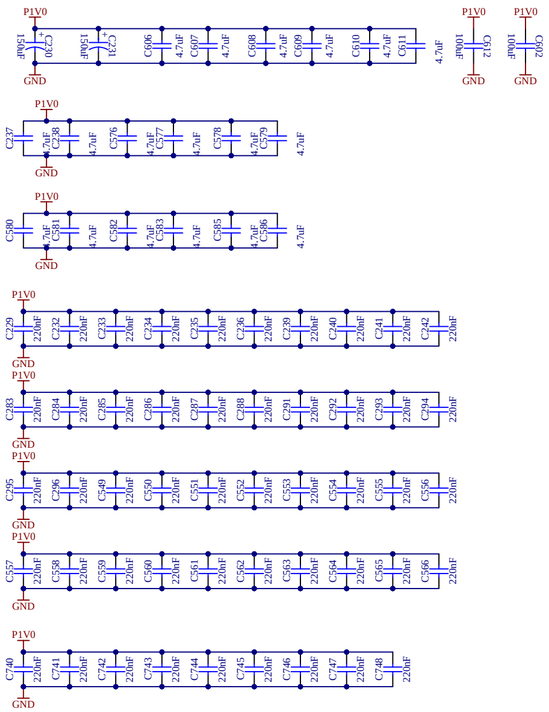

VCCAUX

3x47uF, 4x4.7uF, 7x0.47uF

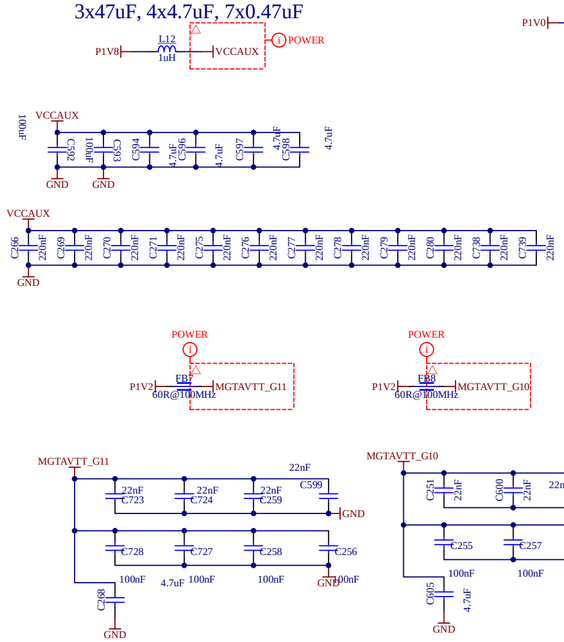

VCCBRAM

2x100uF, 4x4.7uF, 8x0.47uF

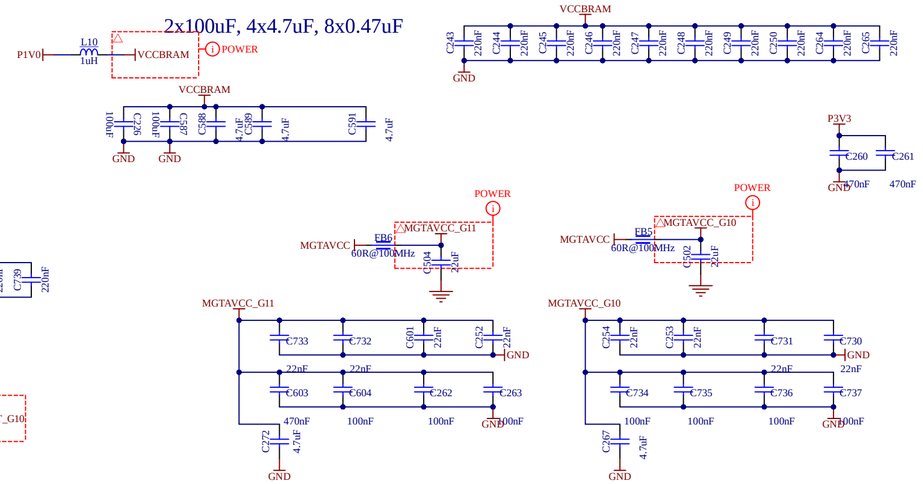

MGTAVCC	1V	2.3A		
MGTAVTT	1.2V	1.5A		
MGTVCCAUX	1.8V	0.5A		
VCCAUX	1.8V	1A		seq1
VCCAUX_IO	1.8/2V	01A		seq1
VCCBRAM	1V	1.8A		seq0
VCCINT	1V	6A		seq0
VCCO_1.2	1.2V	3.2A	seq2	
VCCO_1.35	1.35V	0.9A		seq2
VCCO_1.5	1.5V	0.9A	seq2	
VCCO_1.8	1.8V	0.9A	seq2	
VCCO_2.5	2.5V	0.9A	seq2	
VCCO_3.3	3.3V	0.9A	seq2	

power-on sequence is VCCINT, VCCBRAM, VCCAUX, and VCCO
voltage difference between VCCO and VCCAUX must not exceed 2.625V for longer than TVCCO2VCCAUX
power-on sequence to achieve minimum current draw for the GTP transceivers is VCCINT, VMGTAVCC,
VMGTAVTT OR VMGTAVCC, VCCINT, VMGTAVTT. There is no recommended sequencing for VMGTVCCAUX. Both VMGTAVCC and VCCINT can be ramped simultaneously. The recommended power-off sequence is the reverse of the power-on sequence to
achieve minimum current draw.
When VMGTAVTT is powered before VMGTAVCC and VMGTAVTT – VMGTAVCC > 150 mV and VMGTAVCC < 0.7V, the
VMGTAVTT current draw can increase by 460 mA per transceiver during VMGTAVCC ramp up. The duration of the current
draw can be up to 0.3 x TMGTAVCC (ramp time from GND to 90% of VMGTAVCC). The reverse is true for power-down.
• When VMGTAVTT is powered before VCCINT and VMGTAVTT – VCCINT > 150 mV and VCCINT < 0.7V, the VMGTAVTT current
draw can increase by 50 mA per transceiver during VCCINT ramp up. The duration of the current draw can be up to
0.3 x TVCCINT (ramp time from GND to 90% of VCCINT). The reverse is true for power-down.

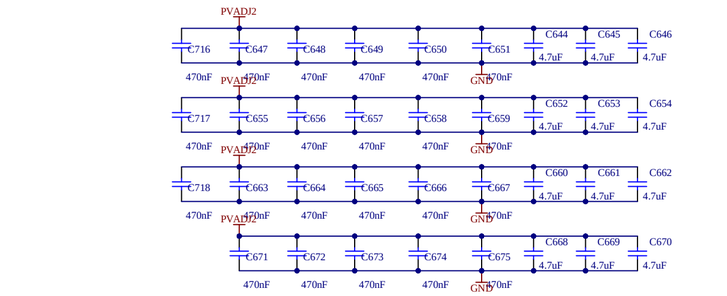

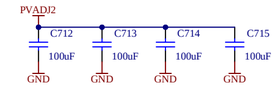

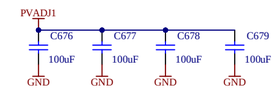

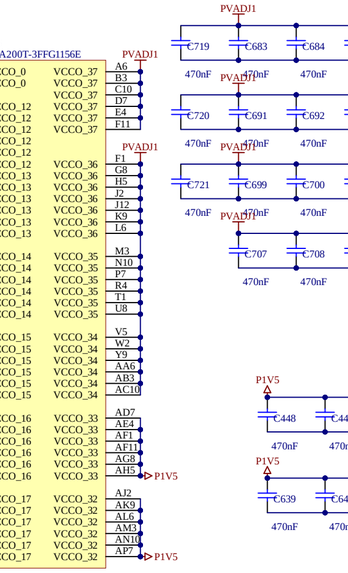

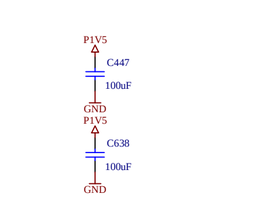

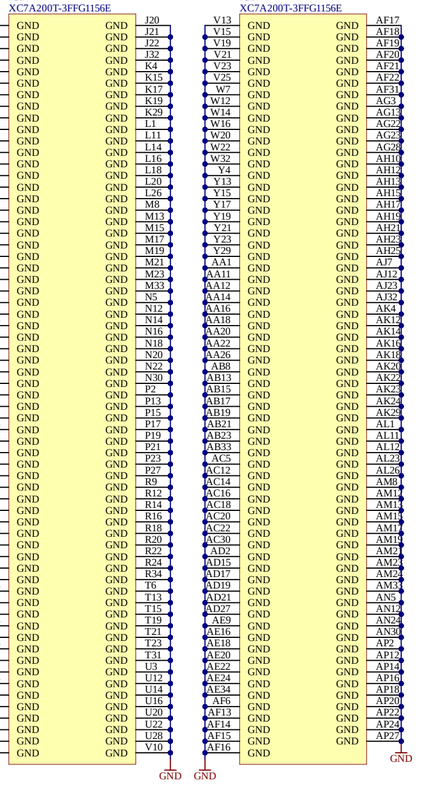

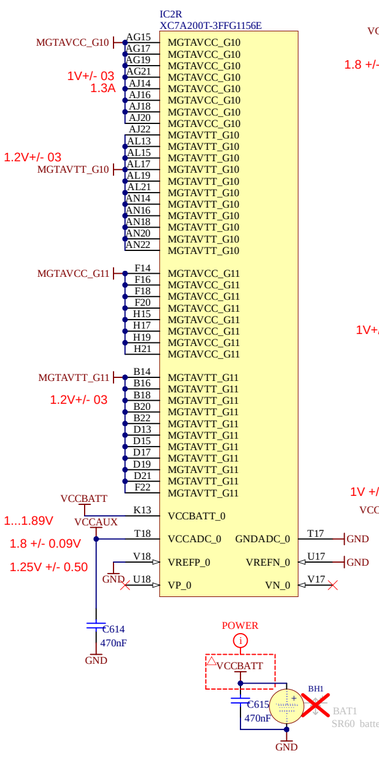

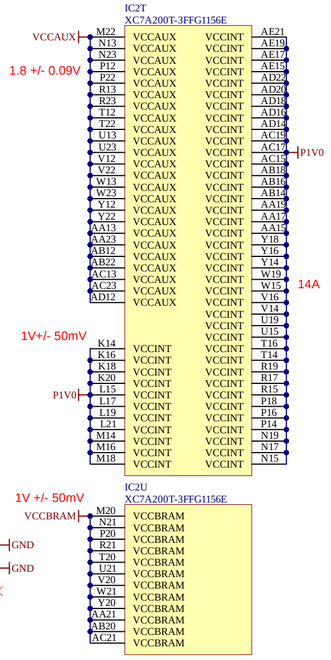

For VCCO_37 and 37 please follow:
" VCCO pins in unbonded banks must be connected to the VCCO for that bank for package migration. Do NOT connect unbonded VCCO pins to different supplies. Without a package migration requirement, VCCO pins in unbonded banks can be tied to a common supply (VCCO or ground)"
No migration available (since there is no 350T) - I recommend connecting to comfy power rail and using as power decoupling placeholder for decaps. Remove bulks C222 and C219

Copyright CNPEM 2013, WUT ISE 2020

This documentation describes Open Hardware and is licensed under CERN OHL v.1.1. You may redistribute and modify this documentation under the terms of the CERN OHL v1.1. (http://ohwr.org/CERNOHL). This documentation is distributed WITHOUT ANY EXPRESS OR IMPLIED WARRANTY, INCLUDING OF MERCHANTABLITY, SATISFACTORY QUALITY AND FITNESS FOR A PARTICULAR PURPOSE. Please see the CERN OHL v.1.1 for applicable conditions

Project/Equipment	AMC FMC Carrier		
Document	**AMC FMC Carrier v4 FPGA Power & Decoupling**	Designer T.Przywozki	
		Drawn by *	XX/XX/XXXX
		Check.by *	-
		Last Mod. F. Switakowski	27.11.2024
		File FPGA_SUP.SchDoc	
		Print Date 24.10.2025 13:06:33	Sheet 4 of 29
Warsaw University of Technology Nowowiejska 15/19 00-665 Warsaw	ISE	Contact: t.przywozki@gmail.com	Size A2 Rev 1

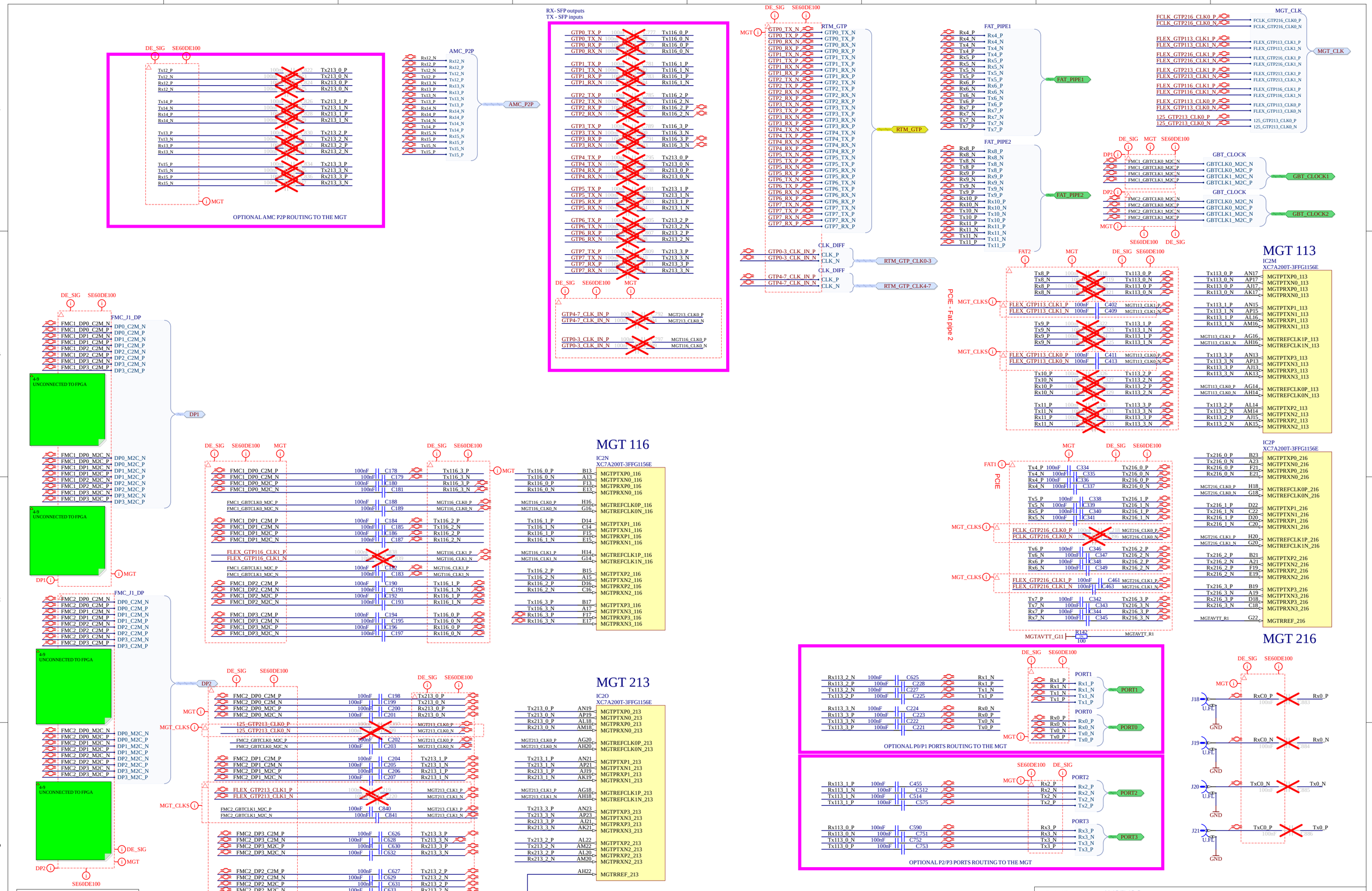

Copyright CNPEM 2013, WUT ISE 2020

This documentation describes Open Hardware and is licensed under CERN OHL v.1.1. You may redistribute and modify this documentation under the terms of the CERN OHL v1.1. (http://ohwr.org/CERNOHL). This documentation is dristributed WITHOUT ANY EXPRESS OR IMPLIED WARRANTY, INCLUDING OF MERCHANTABLITY, SATISFACTORY QUALITY AND FITNESS FOR A PARTICULAR PURPOSE. Please see the CERN OHL v.1.1 for applicable conditions

Project/Equipment: AMC FMC Carrier

Document: **AMC FMC Carrier v4 FPGA GTP banks**

Designer	T.Przywozki	
Drawn by	*	XX/XX/XXXX
Check.by	*	-
Last Mod.	M. Biernat	16.01.2025
File	FPGA_MGT.SchDoc	
Print Date	24.10.2025 13:06:34	Sheet 5 of 29

Warsaw University of Technology
Nowowiejska 15/19 00-665 Warsaw
ISE
Contact: t.przywozki@gmail.com
Size A2 Rev 1

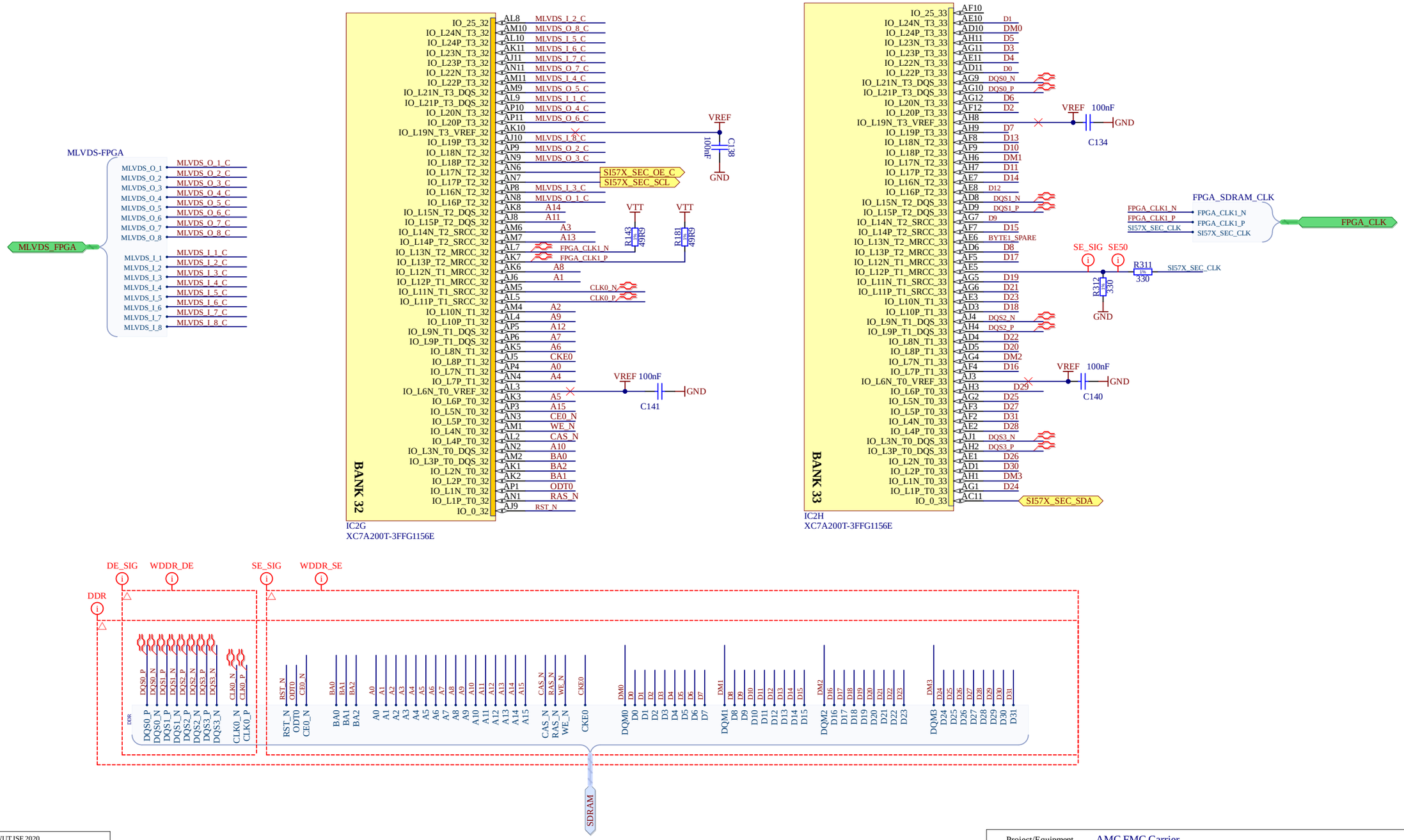

Copyright CNPEM 2013, WUT ISE 2020

This documentation describes Open Hardware and is licensed under CERN OHL v.1.1. You may redistribute and modify this documentaction under the terms of the CERN OHL v1.1. (http://ohwr.org/CERNOHL). This documentation is dristributed WITHOUT ANY EXPRESS OR IMPLIED WARRANTY, INCLUDING OF MERCHANTABLITY, SATISFACTORY QUALITY AND FITNESS FOR A PARTICULAR PURPOSE. Please see the CERN OHL v.1.1 for applicable conditions

Project/Equipment	AMC FMC Carrier		
Document	**AMC FMC Carrier v4 FPGA banks 32 & 33 (SDRAM)**	Designer	T. Przywozki
		Drawn by	XX/XX/XXXX
		Check.by	-
		Last Mod.	F. Switakowski 16.01.2025
		File	FPGA_SDRAM.SchDoc
		Print Date	24.10.2025 13:06:34 Sheet 6 of 29
Warsaw University of Technology Nowowiejska 15/19 00-665 Warsaw	ISE	Contact:	t.przywozki@gmail.com
		Size	A3
		Rev	1

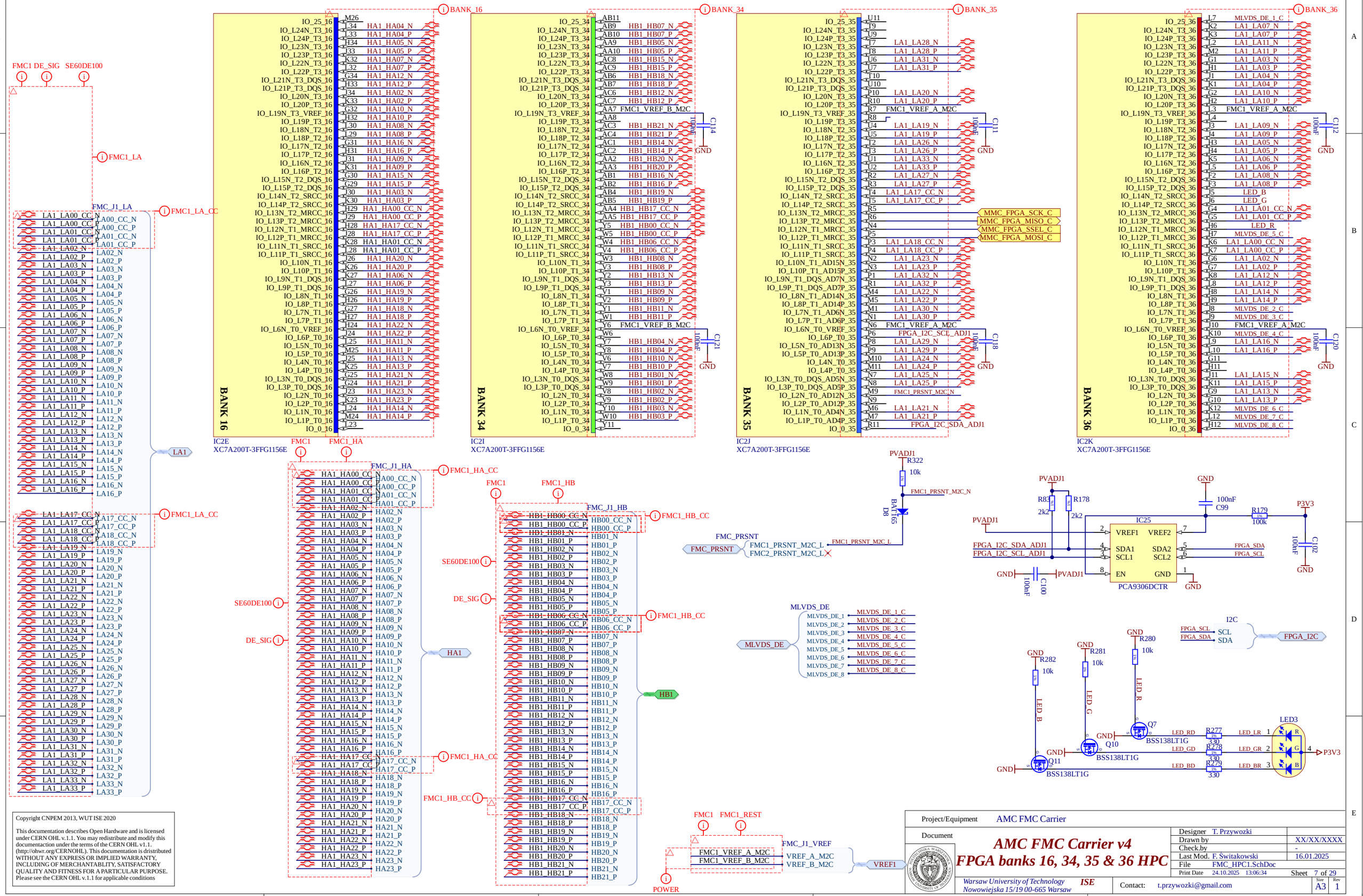

Copyright CNPEM 2013, WUT ISE 2020

This documentation describes Open Hardware and is licensed under CERN OHL v.1.1. You may redistribute and modify this documentaction under the terms of the CERN OHL v1.1. (http://ohwr.org/CERNOHL). This documentation is distributed WITHOUT ANY EXPRESS OR IMPLIED WARRANTY, INCLUDING OF MERCHANTABLITY, SATISFACTORY QUALITY AND FITNESS FOR A PARTICULAR PURPOSE. Please see the CERN OHL v.1.1 for applicable conditions

Project/Equipment	AMC FMC Carrier		
Document	**AMC FMC Carrier v4** **FPGA banks 16, 34, 35 & 36 HPC**	Designer	T. Przywozki
		Drawn by	XX/XX/XXXX
		Check.by	-
		Last Mod.	F. Świtakowski 16.01.2025
		File	FMC_HPC1.SchDoc
		Print Date	24.10.2025 13:06:34
		Sheet	7 of 29
	Warsaw University of Technology *Nowowiejska 15/19 00-665 Warsaw*	Contact:	t.przywozki@gmail.com
	ISE	Size	A3
		Rev	1

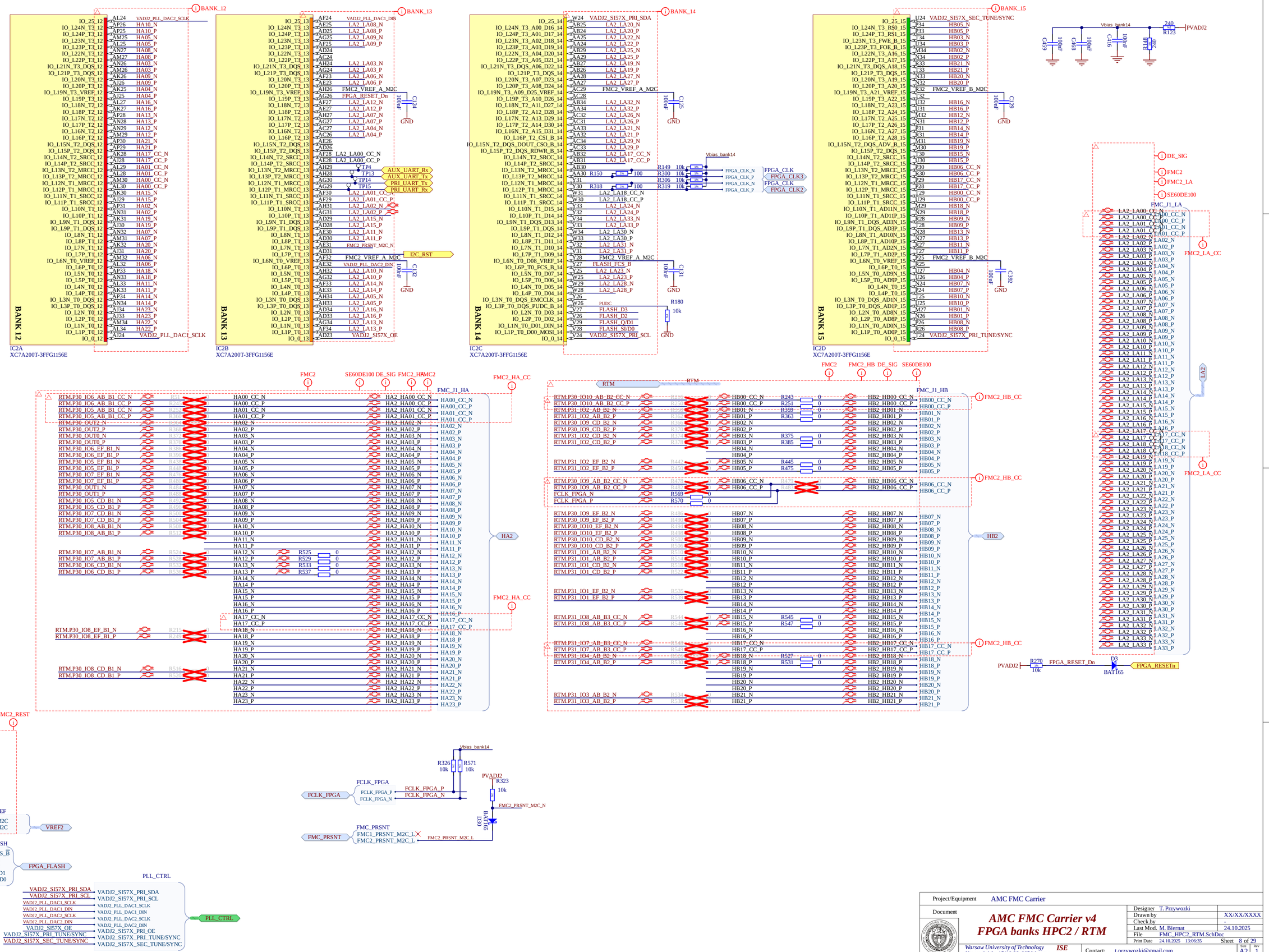

Copyright CNPEM 2013, WUT ISE 2020

This documentation describes Open Hardware and is licensed under CERN OHL v.1.1. You may redistribute and modify this documentation under the terms of the CERN OHL v1.1. (http://ohwr.org/CERNOHL). This documentation is drisitributed WITHOUT ANY EXPRESS OR IMPLIED WARRANTY, INCLUDING OF MERCHANTABLITY, SATISFACTORY QUALITY AND FITNESS FOR A PARTICULAR PURPOSE. Please see the CERN OHL v.1.1 for applicable conditions

Project/Equipment	AMC FMC Carrier		
Document	**AMC FMC Carrier v4 FPGA banks HPC2 / RTM**	Designer	T. Przywozki
		Drawn by	XX/XX/XXXX
		Check.by	-
		Last Mod.	M. Biernat 24.10.2025
		File	FMC_HPC2_RTM.SchDoc
		Print Date	24.10.2025 13:06:35 Sheet 8 of 29

Warsaw University of Technology *ISE*
Nowowiejska 15/19 00-665 Warsaw
Contact: t.przywozki@gmail.com

Size A2 Rev 1

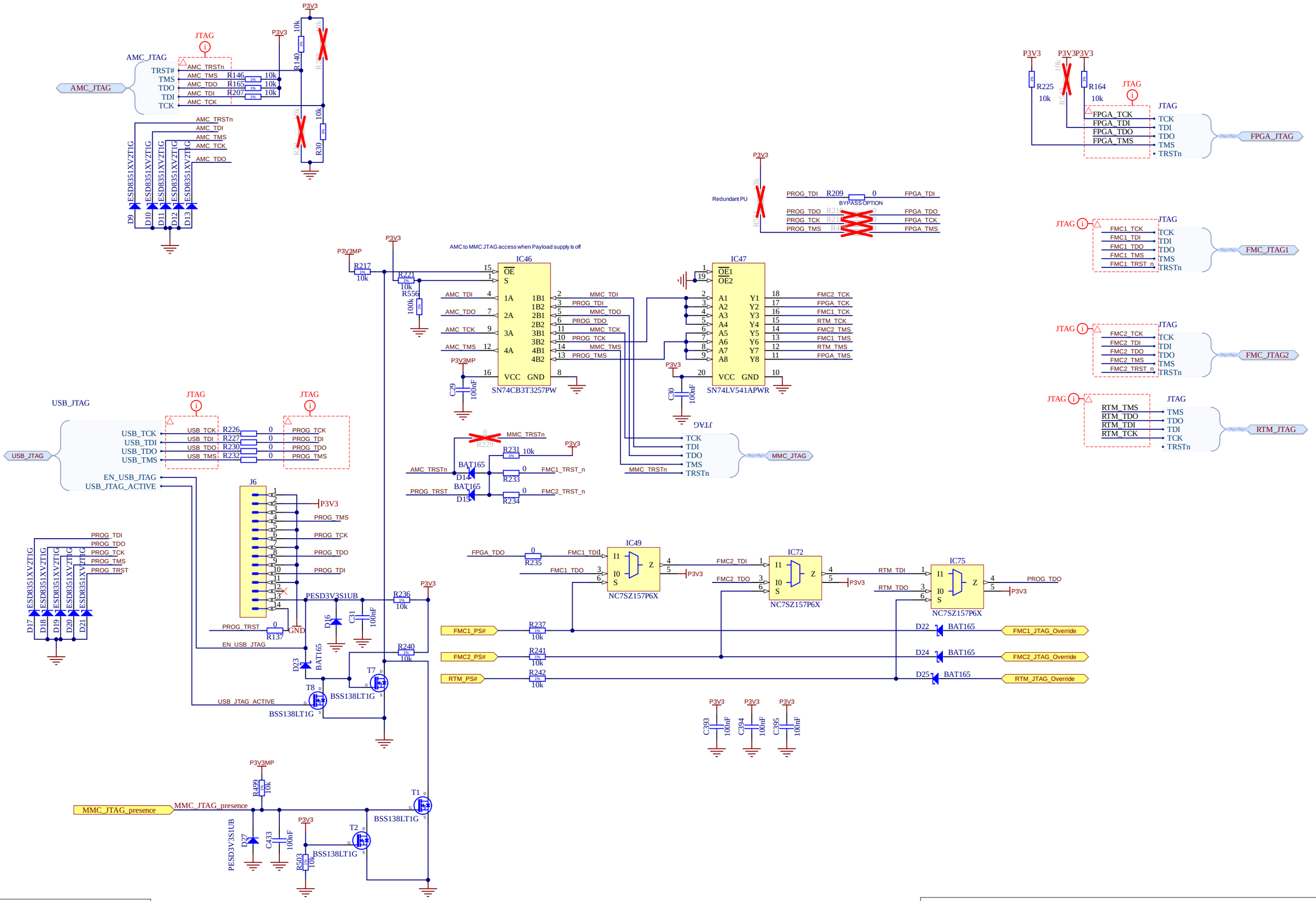

Copyright CNPEM 2013, WUT ISE 2020

This documentation describes Open Hardware and is licensed under CERN OHL v.1.1. You may redistribute and modify this documentation under the terms of the CERN OHL v1.1. (http://ohwr.org/CERNOHL). This documentation is dristributed WITHOUT ANY EXPRESS OR IMPLIED WARRANTY, INCLUDING OF MERCHANTABLITY, SATISFACTORY QUALITY AND FITNESS FOR A PARTICULAR PURPOSE. Please see the CERN OHL v.1.1 for applicable conditions

Project/Equipment	AMC FMC Carrier		
Document	**AMC FMC Carrier v4 JTAG Chain**	Designer	T. Przywozki
		Drawn by	XX/XX/XXXX
		Check.by	-
		Last Mod.	F. Świtakowski 14.11.2024
		File	JTAG_Configuration.SchDoc
		Print Date	24.10.2025 13:06:35 Sheet 9 of 29
Warsaw University of Technology ISE Nowowiejska 15/19 00-665 Warsaw	Contact: t.przywozki@gmail.com	Size A3	Rev 1

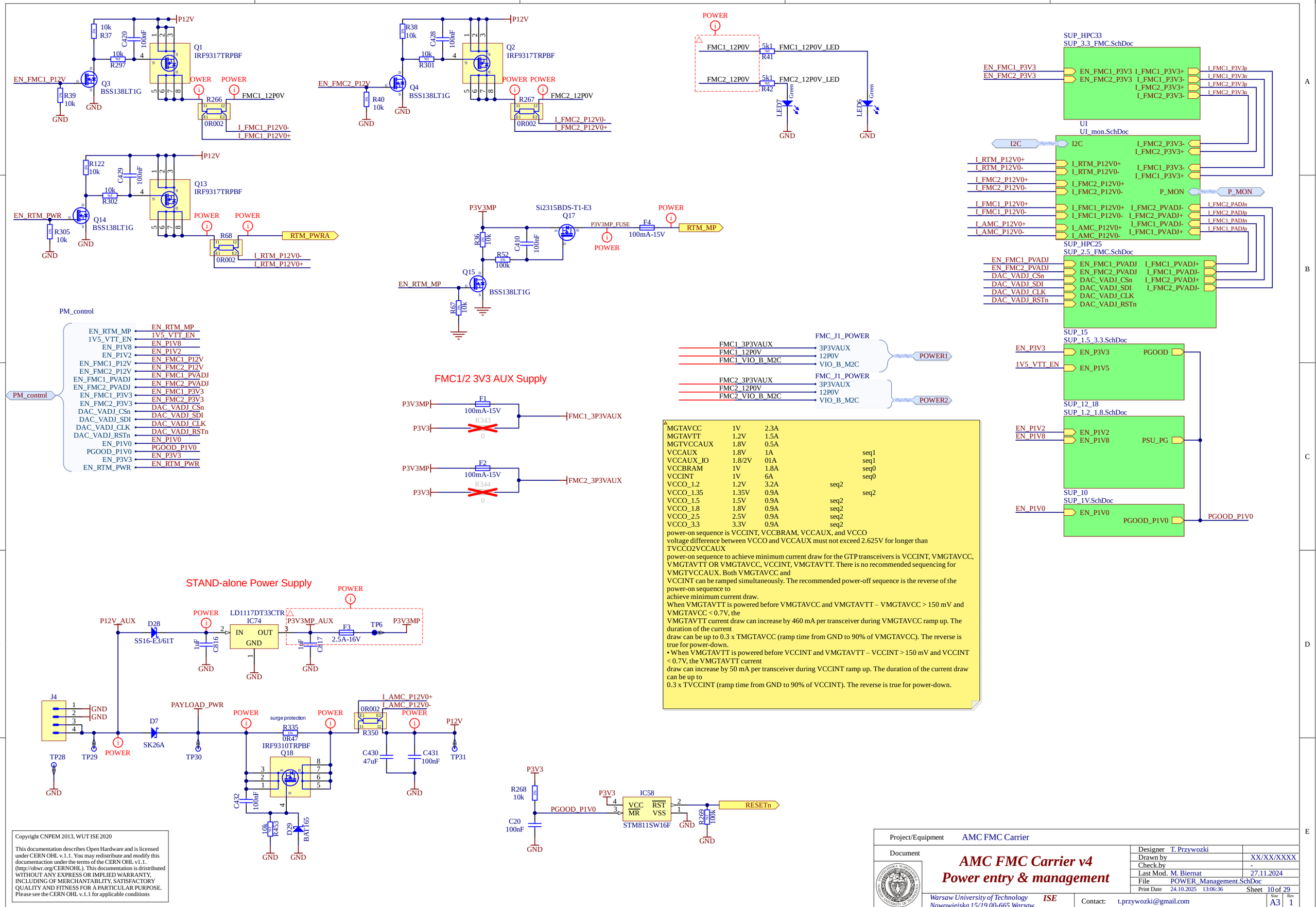

MGTAVCC	1V	2.3A		
MGTAVTT	1.2V	1.5A		
MGTVCCAUX	1.8V	0.5A		
VCCAUX	1.8V	1A		seq1
VCCAUX_IO	1.8/2V	01A		seq1
VCCBRAM	1V	1.8A		seq0
VCCINT	1V	6A		seq0
VCCO_1.2	1.2V	3.2A	seq2	
VCCO_1.35	1.35V	0.9A		seq2
VCCO_1.5	1.5V	0.9A	seq2	
VCCO_1.8	1.8V	0.9A	seq2	
VCCO_2.5	2.5V	0.9A	seq2	
VCCO_3.3	3.3V	0.9A	seq2	

power-on sequence is VCCINT, VCCBRAM, VCCAUX, and VCCO
voltage difference between VCCO and VCCAUX must not exceed 2.625V for longer than TVCCO2VCCAUX
power-on sequence to achieve minimum current draw for the GTP transceivers is VCCINT, VMGTAVCC, VMGTAVTT OR VMGTAVCC, VCCINT, VMGTAVTT. There is no recommended sequencing for VMGTVCCAUX. Both VMGTAVCC and
VCCINT can be ramped simultaneously. The recommended power-off sequence is the reverse of the power-on sequence to
achieve minimum current draw.
When VMGTAVTT is powered before VMGTAVCC and VMGTAVTT – VMGTAVCC > 150 mV and VMGTAVCC < 0.7V, the
VMGTAVTT current draw can increase by 460 mA per transceiver during VMGTAVCC ramp up. The duration of the current
draw can be up to 0.3 x TMGTAVCC (ramp time from GND to 90% of VMGTAVCC). The reverse is true for power-down.
• When VMGTAVTT is powered before VCCINT and VMGTAVTT – VCCINT > 150 mV and VCCINT < 0.7V, the VMGTAVTT current
draw can increase by 50 mA per transceiver during VCCINT ramp up. The duration of the current draw can be up to
0.3 x TVCCINT (ramp time from GND to 90% of VCCINT). The reverse is true for power-down.

Copyright CNPEM 2013, WUT ISE 2020

This documentation describes Open Hardware and is licensed under CERN OHL v.1.1. You may redistribute and modify this documentaction under the terms of the CERN OHL v1.1. (http://ohwr.org/CERNOHL). This documentation is dristributed WITHOUT ANY EXPRESS OR IMPLIED WARRANTY, INCLUDING OF MERCHANTABLITY, SATISFACTORY QUALITY AND FITNESS FOR A PARTICULAR PURPOSE. Please see the CERN OHL v.1.1 for applicable conditions

Project/Equipment: AMC FMC Carrier

Document: **AMC FMC Carrier v4**
Power entry & management

Designer	T. Przywozki
Drawn by	XX/XX/XXXX
Check.by	-
Last Mod.	M. Biernat 27.11.2024
File	POWER_Management.SchDoc
Print Date	24.10.2025 13:06:36
Sheet	10 of 29
Size	A3
Rev	1

Warsaw University of Technology
Nowowiejska 15/19 00-665 Warsaw
ISE
Contact: t.przywozki@gmail.com

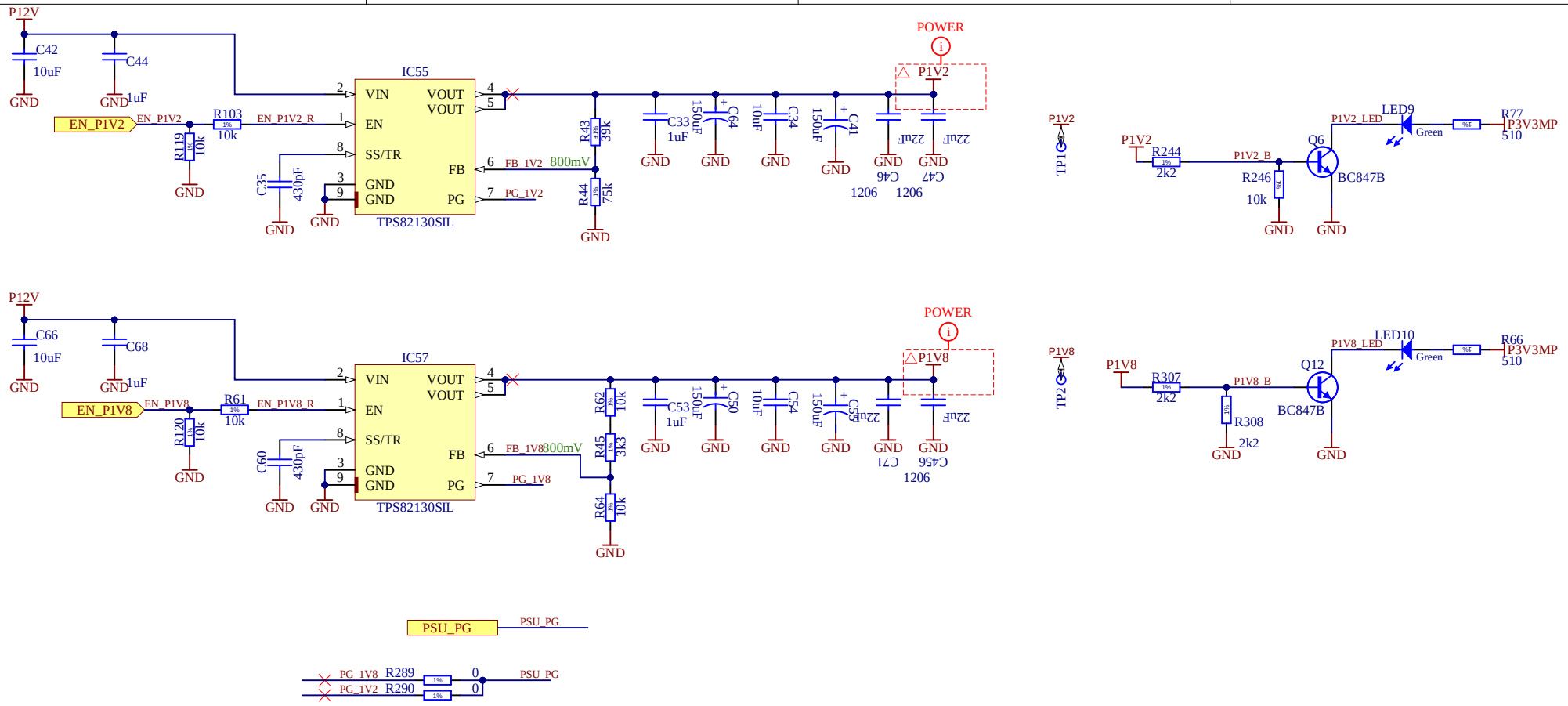

Copyright CNPEM 2013, WUT ISE 2020

This documentation describes Open Hardware and is licensed under CERN OHL v.1.1. You may redistribute and modify this documentaction under the terms of the CERN OHL v1.1. (http://ohwr.org/CERNOHL). This documentation is dristributed WITHOUT ANY EXPRESS OR IMPLIED WARRANTY, INCLUDING OF MERCHANTABLITY, SATISFACTORY QUALITY AND FITNESS FOR A PARTICULAR PURPOSE. Please see the CERN OHL v.1.1 for applicable conditions

Project/Equipment	AMC FMC Carrier		
Document	**AMC FMC Carrier v4 Power P1V2 & P1V8**	Designer	T. Przywozki
		Drawn by	XX/XX/XXXX
		Check.by	-
		Last Mod.	F. Świtakowski 27.11.2024
		File	SUP_1.2_1.8.SchDoc
		Print Date	24.10.2025 13:06:36 Sheet 11 of 29

Warsaw University of Technology
Nowowiejska 15/19 00-665 Warsaw
ISE
Contact: t.przywozki@gmail.com

Size A4 Rev 1

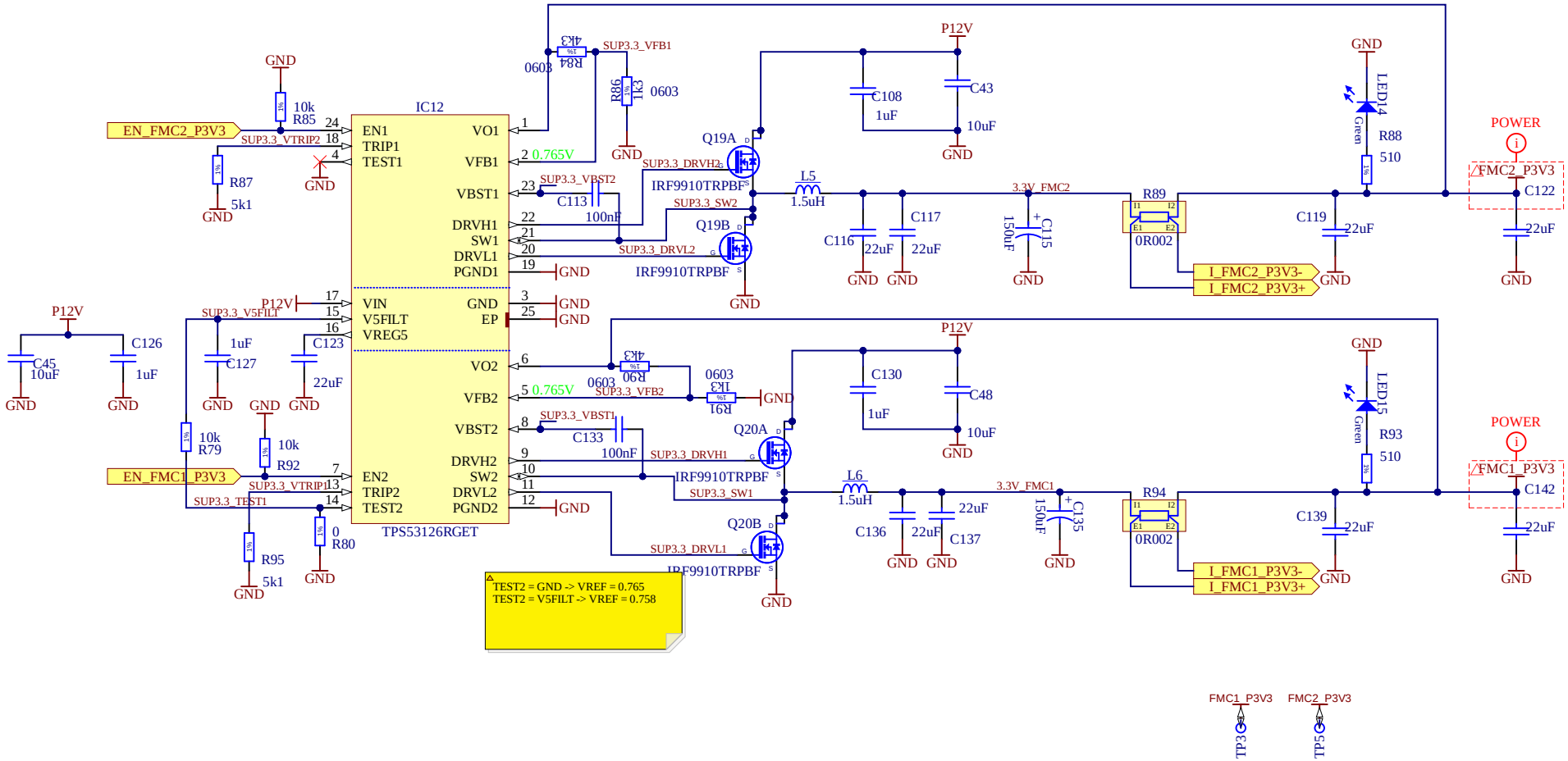

Copyright CNPEM 2013, WUT ISE 2020

This documentation describes Open Hardware and is licensed under CERN OHL v.1.1. You may redistribute and modify this documentaction under the terms of the CERN OHL v1.1. (http://ohwr.org/CERNOHL). This documentation is distributed WITHOUT ANY EXPRESS OR IMPLIED WARRANTY, INCLUDING OF MERCHANTABLITY, SATISFACTORY QUALITY AND FITNESS FOR A PARTICULAR PURPOSE. Please see the CERN OHL v.1.1 for applicable conditions

Project/Equipment	AMC FMC Carrier		
Document	**AMC FMC Carrier v4 Power FMCs P3V3**	Designer	T. Przywozki
		Drawn by	XX/XX/XXXX
		Check.by	-
		Last Mod.	F. Świtakowski 27.11.2024
		File	SUP_3.3_FMC.SchDoc
		Print Date	24.10.2025 13:06:36 Sheet 12 of 29

Warsaw University of Technology
Nowowiejska 15/19 00-665 Warsaw
ISE
Contact: t.przywozki@gmail.com

Size A4 Rev 1

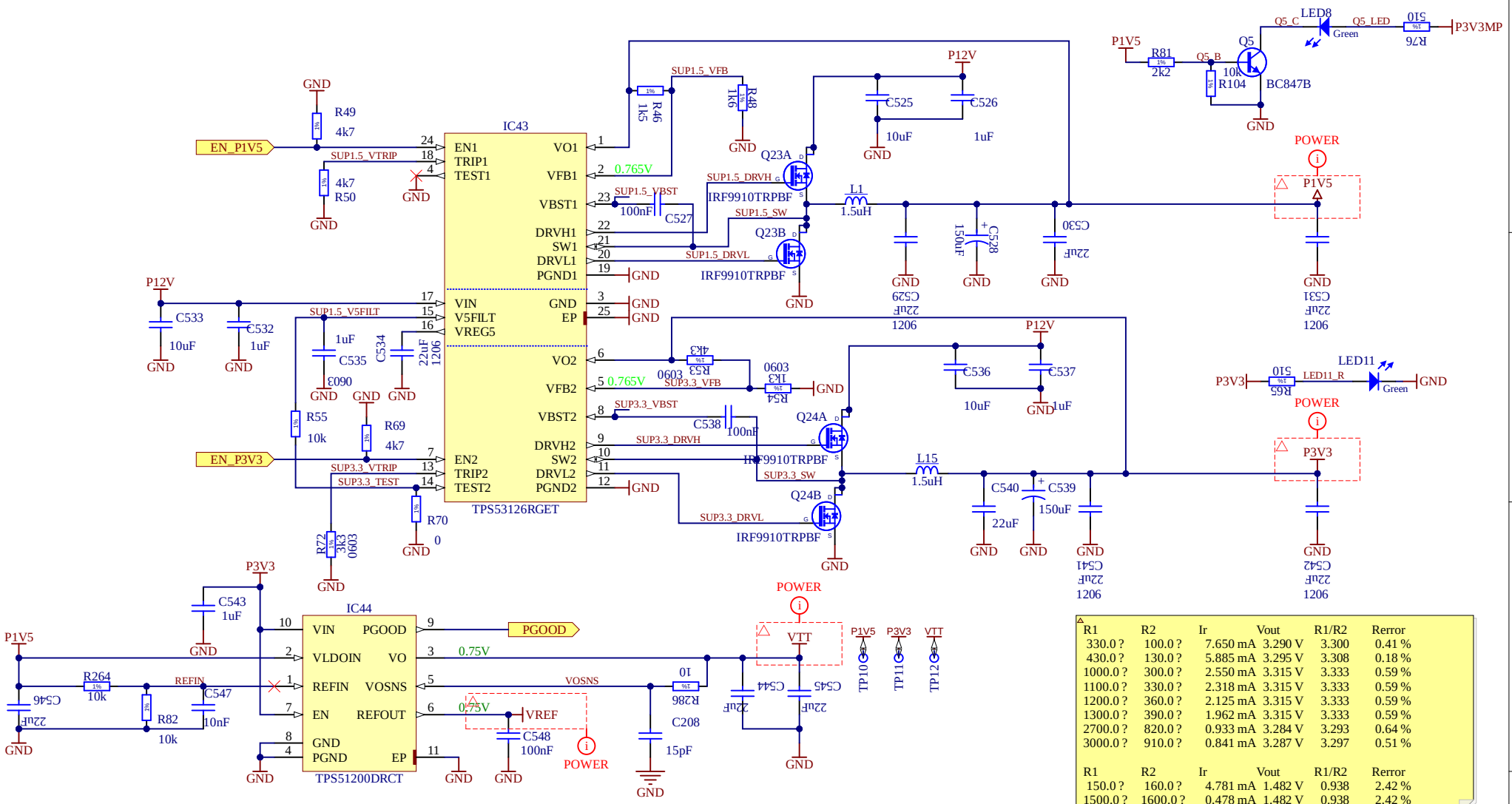

R1	R2	Ir	Vout	R1/R2	Rerror
330.0 ?	100.0 ?	7.650 mA	3.290 V	3.300	0.41 %
430.0 ?	130.0 ?	5.885 mA	3.295 V	3.308	0.18 %
1000.0 ?	300.0 ?	2.550 mA	3.315 V	3.333	0.59 %
1100.0 ?	330.0 ?	2.318 mA	3.315 V	3.333	0.59 %
1200.0 ?	360.0 ?	2.125 mA	3.315 V	3.333	0.59 %
1300.0 ?	390.0 ?	1.962 mA	3.315 V	3.333	0.59 %
2700.0 ?	820.0 ?	0.933 mA	3.284 V	3.293	0.64 %
3000.0 ?	910.0 ?	0.841 mA	3.287 V	3.297	0.51 %

R1	R2	Ir	Vout	R1/R2	Rerror
150.0 ?	160.0 ?	4.781 mA	1.482 V	0.938	2.42 %
1500.0 ?	1600.0 ?	0.478 mA	1.482 V	0.938	2.42 %

Copyright CNPEM 2013, WUT ISE 2020

This documentation describes Open Hardware and is licensed under CERN OHL v.1.1. You may redistribute and modify this documentation under the terms of the CERN OHL v1.1. (http://ohwr.org/CERNOHL). This documentation is distributed WITHOUT ANY EXPRESS OR IMPLIED WARRANTY, INCLUDING OF MERCHANTABLITY, SATISFACTORY QUALITY AND FITNESS FOR A PARTICULAR PURPOSE. Please see the CERN OHL v.1.1 for applicable conditions

Project/Equipment: AMC FMC Carrier

Document

AMC FMC Carrier v4
Power P1V5, P3V3 & VTT

Designer	T. Przywozki
Drawn by	XX/XX/XXXX
Check.by	-
Last Mod.	F. Świtakowski 27.11.2024
File	SUP_1.5_3.3.SchDoc
Print Date	24.10.2025 13:06:36
Sheet	13 of 29
Size	A4
Rev	1

Warsaw University of Technology
Nowowiejska 15/19 00-665 Warsaw
ISE
Contact: t.przywozki@gmail.com

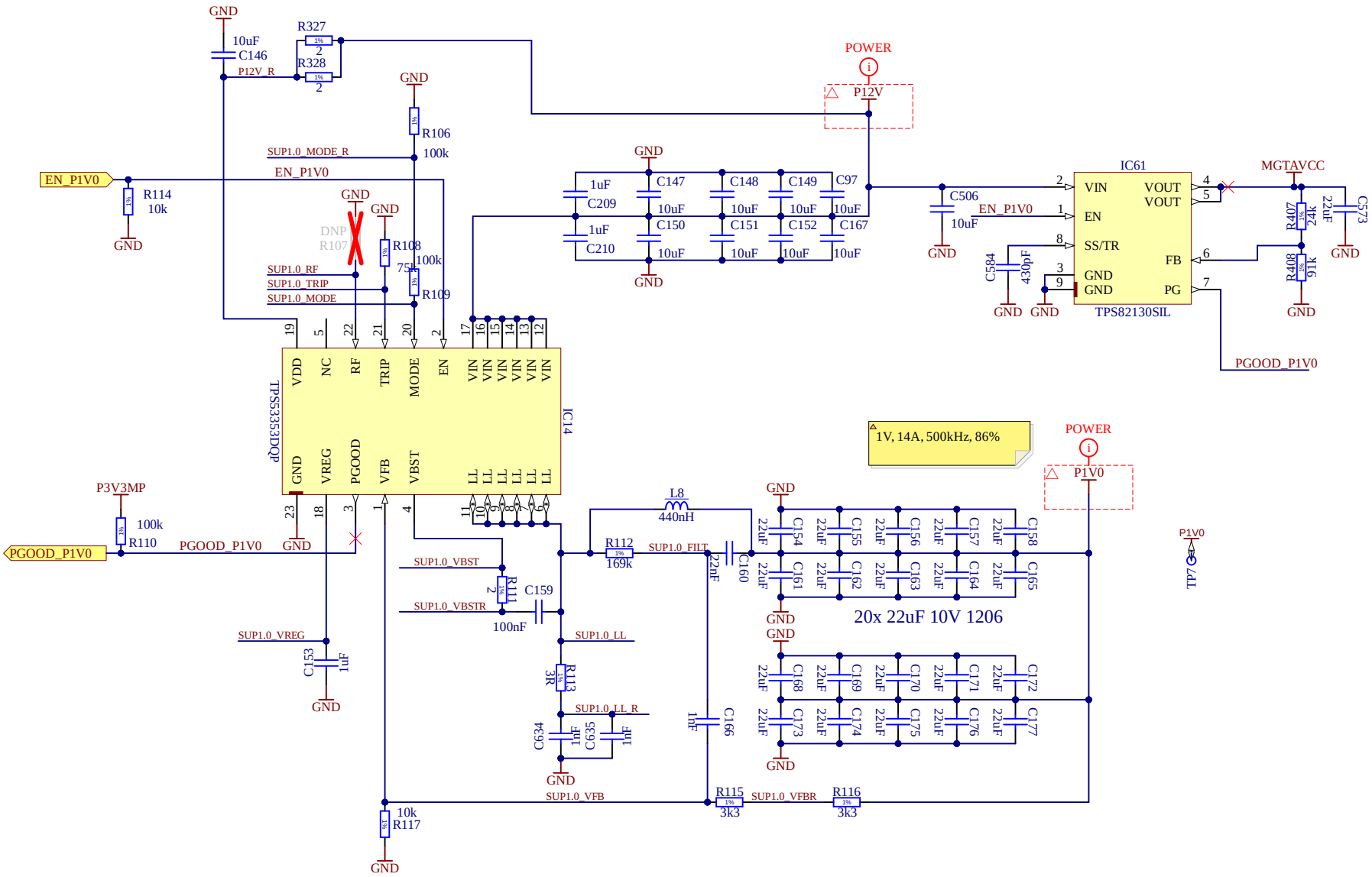

Copyright CNPEM 2013, WUT ISE 2020

This documentation describes Open Hardware and is licensed under CERN OHL v.1.1. You may redistribute and modify this documentaction under the terms of the CERN OHL v1.1. (http://ohwr.org/CERNOHL). This documentation is distributed WITHOUT ANY EXPRESS OR IMPLIED WARRANTY, INCLUDING OF MERCHANTABLITY, SATISFACTORY QUALITY AND FITNESS FOR A PARTICULAR PURPOSE. Please see the CERN OHL v.1.1 for applicable conditions

Project/Equipment: AMC FMC Carrier

Document

AMC FMC Carrier v4
Power P1V0

Designer	T. Przywozki
Drawn by	XX/XX/XXXX
Check.by	-
Last Mod.	F. Świtakowski 27.11.2024
File	SUP_1V.SchDoc
Print Date	24.10.2025 13:06:36
Sheet	14 of 29

Warsaw University of Technology
Nowowiejska 15/19 00-665 Warsaw
ISE
Contact: t.przywozki@gmail.com

Size A4 Rev 1

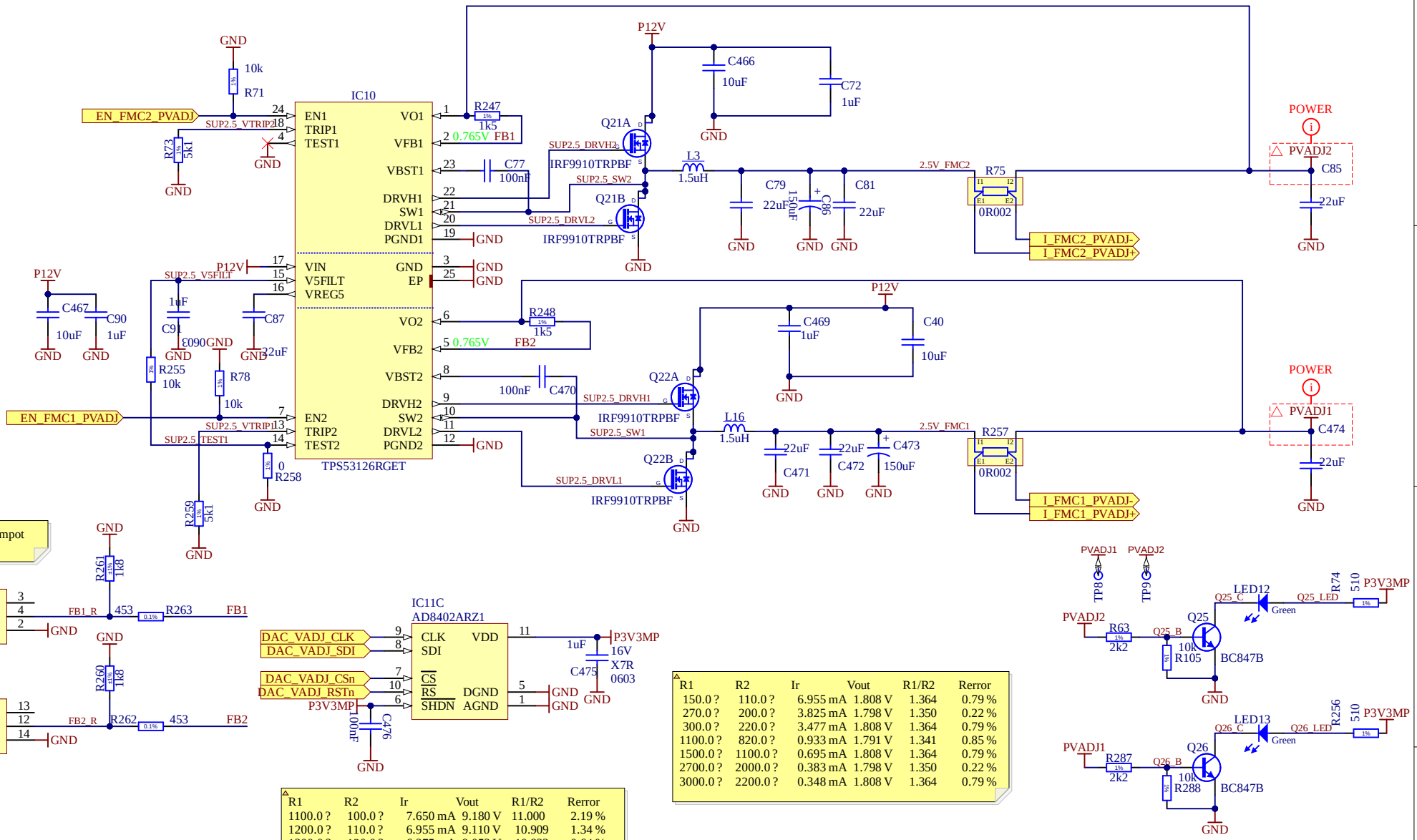

R1	R2	Ir	Vout	R1/R2	Rerror
150.0 ?	110.0 ?	6.955 mA	1.808 V	1.364	0.79 %
270.0 ?	200.0 ?	3.825 mA	1.798 V	1.350	0.22 %
300.0 ?	220.0 ?	3.477 mA	1.808 V	1.364	0.79 %
1100.0 ?	820.0 ?	0.933 mA	1.791 V	1.341	0.85 %
1500.0 ?	1100.0 ?	0.695 mA	1.808 V	1.364	0.79 %
2700.0 ?	2000.0 ?	0.383 mA	1.798 V	1.350	0.22 %
3000.0 ?	2200.0 ?	0.348 mA	1.808 V	1.364	0.79 %

R1	R2	Ir	Vout	R1/R2	Rerror
1100.0 ?	100.0 ?	7.650 mA	9.180 V	11.000	2.19 %
1200.0 ?	110.0 ?	6.955 mA	9.110 V	10.909	1.34 %
1300.0 ?	120.0 ?	6.375 mA	9.053 V	10.833	0.64 %
1600.0 ?	150.0 ?	5.100 mA	8.925 V	10.667	0.91 %
1800.0 ?	160.0 ?	4.781 mA	9.371 V	11.250	4.51 %
2000.0 ?	180.0 ?	4.250 mA	9.265 V	11.111	3.22 %
2200.0 ?	200.0 ?	3.825 mA	9.180 V	11.000	2.19 %
2400.0 ?	220.0 ?	3.477 mA	9.110 V	10.909	1.34 %
2700.0 ?	240.0 ?	3.188 mA	9.371 V	11.250	4.51 %
3000.0 ?	270.0 ?	2.833 mA	9.265 V	11.111	3.22 %
3300.0 ?	300.0 ?	2.550 mA	9.180 V	11.000	2.19 %

Copyright CNPEM 2013, WUT ISE 2020

This documentation describes Open Hardware and is licensed under CERN OHL v.1.1. You may redistribute and modify this documentaction under the terms of the CERN OHL v1.1. (http://ohwr.org/CERNOHL). This documentation is distributed WITHOUT ANY EXPRESS OR IMPLIED WARRANTY, INCLUDING OF MERCHANTABLITY, SATISFACTORY QUALITY AND FITNESS FOR A PARTICULAR PURPOSE. Please see the CERN OHL v.1.1 for applicable conditions

Project/Equipment: AMC FMC Carrier

Document

AMC FMC Carrier v4
Power FMCs PVADJ

Designer	T. Przywozki
Drawn by	XX/XX/XXXX
Check.by	-
Last Mod.	F. Świtakowski 27.11.2024
File	SUP_2.5_FMC.SchDoc
Print Date	24.10.2025 13:06:37
Sheet	15 of 29
Size	A4
Rev	1

Warsaw University of Technology
Nowowiejska 15/19 00-665 Warsaw
ISE
Contact: t.przywozki@gmail.com

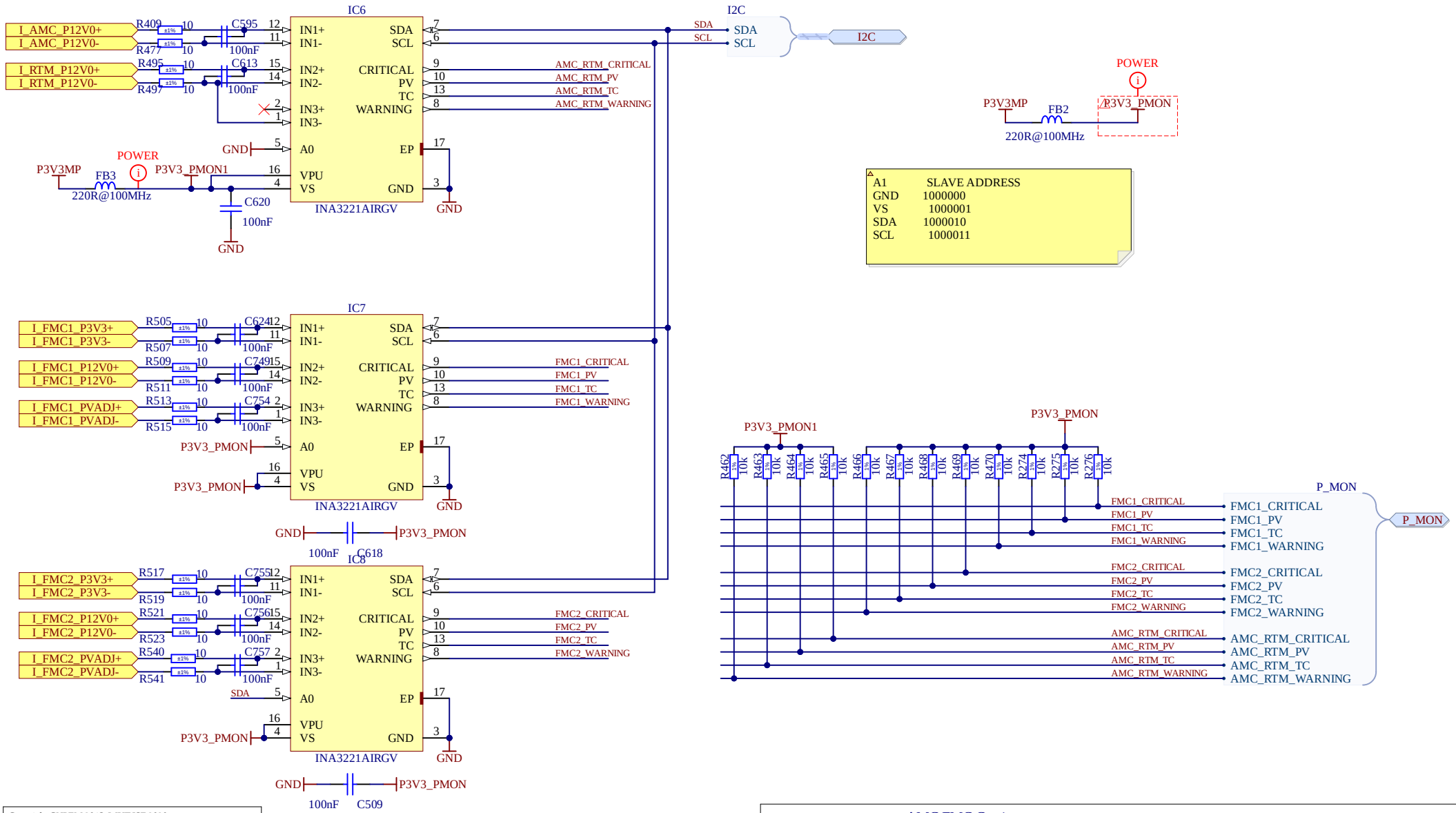

Copyright CNPEM 2013, WUT ISE 2020

This documentation describes Open Hardware and is licensed under CERN OHL v.1.1. You may redistribute and modify this documentaction under the terms of the CERN OHL v1.1. (http://ohwr.org/CERNOHL). This documentation is distributed WITHOUT ANY EXPRESS OR IMPLIED WARRANTY, INCLUDING OF MERCHANTABLITY, SATISFACTORY QUALITY AND FITNESS FOR A PARTICULAR PURPOSE. Please see the CERN OHL v.1.1 for applicable conditions

Project/Equipment	AMC FMC Carrier		
Document	**AMC FMC Carrier v4 Power Measurement**	Designer	T. Przywozki
		Drawn by	XX/XX/XXXX
		Check.by	-
		Last Mod.	F. Świtakowski 14.11.2024
		File	UI_mon.SchDoc
		Print Date	24.10.2025 13:06:37
		Sheet	16 of 29

Warsaw University of Technology
Nowowiejska 15/19 00-665 Warsaw
ISE
Contact: t.przywozki@gmail.com

Size A4 Rev 1

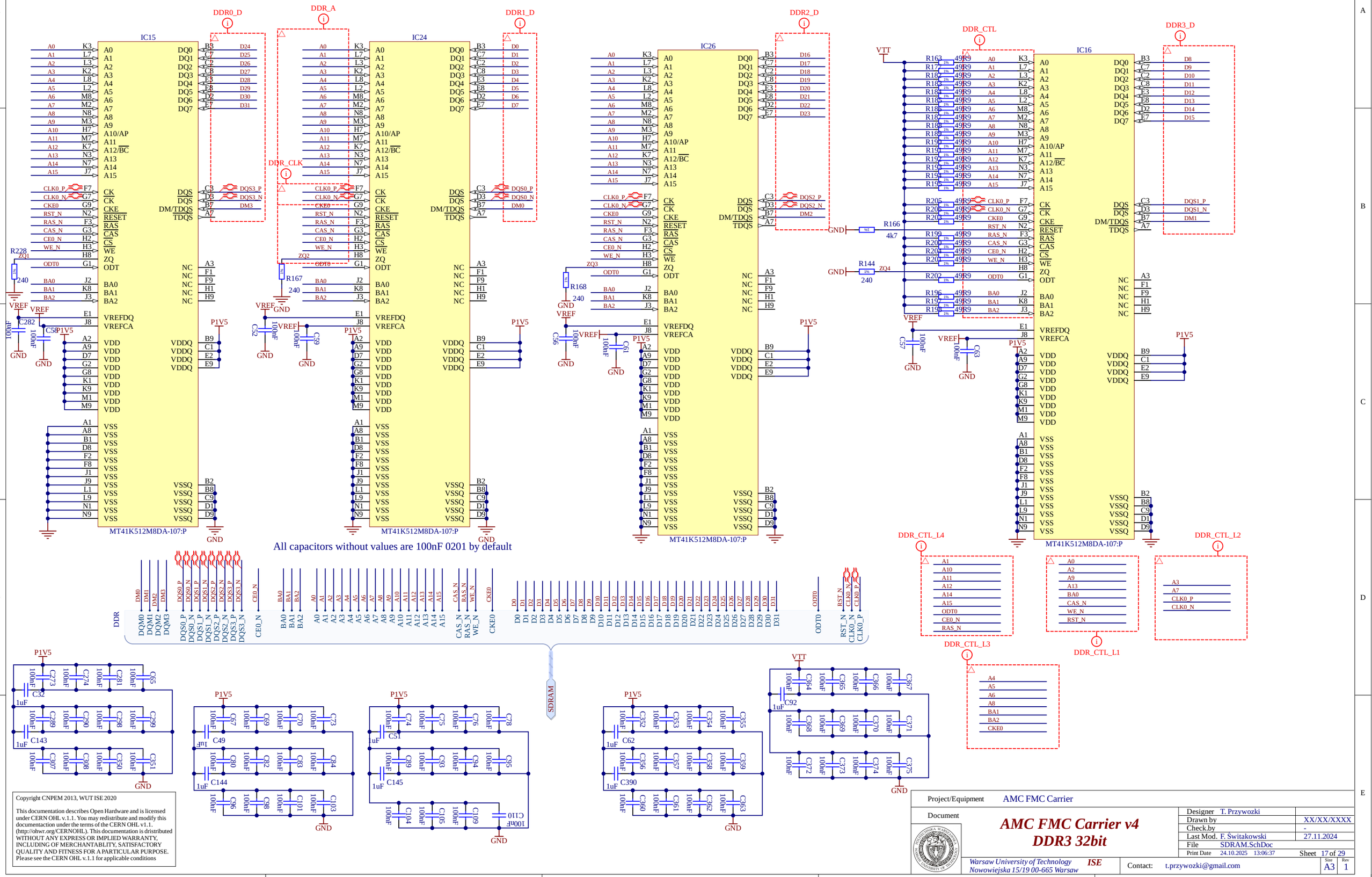

Copyright CNPEM 2013, WUT ISE 2020

This documentation describes Open Hardware and is licensed under CERN OHL v.1.1. You may redistribute and modify this documentation under the terms of the CERN OHL v1.1. (http://ohwr.org/CERNOHL). This documentation is distributed WITHOUT ANY EXPRESS OR IMPLIED WARRANTY, INCLUDING OF MERCHANTABLITY, SATISFACTORY QUALITY AND FITNESS FOR A PARTICULAR PURPOSE. Please see the CERN OHL v.1.1 for applicable conditions

Project/Equipment: AMC FMC Carrier

Document: **AMC FMC Carrier v4 DDR3 32bit**

Designer	T. Przywozki
Drawn by	XX/XX/XXXX
Check.by	-
Last Mod.	F. Switakowski 27.11.2024
File	SDRAM.SchDoc
Print Date	24.10.2025 13:06:37
Sheet	17 of 29

Warsaw University of Technology
Nowowiejska 15/19 00-665 Warsaw
ISE
Contact: t.przywozki@gmail.com

Size A3 | Rev 1

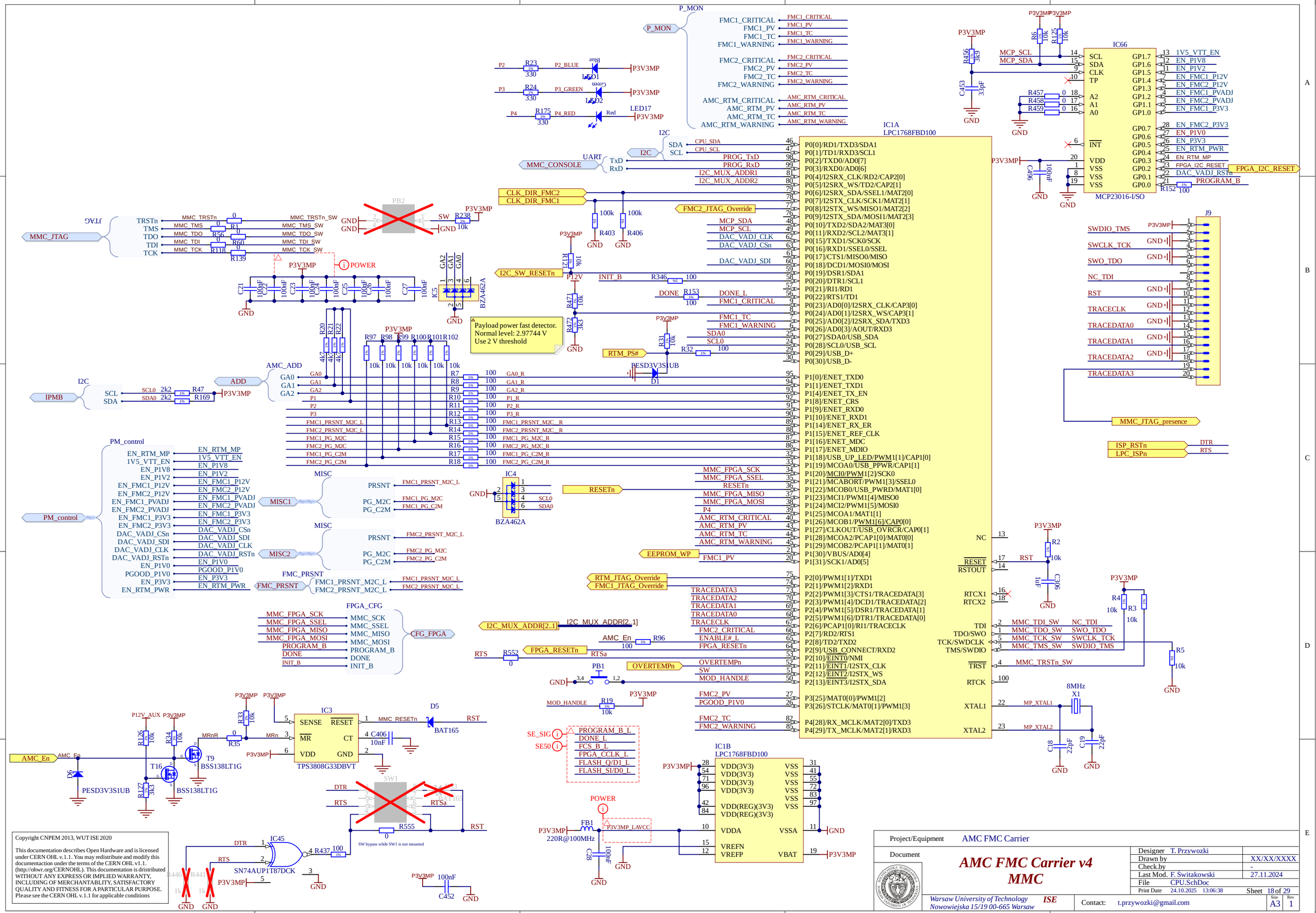

Copyright CNPEM 2013, WUT ISE 2020

This documentation describes Open Hardware and is licensed under CERN OHL v.1.1. You may redistribute and modify this documentaction under the terms of the CERN OHL v1.1. (http://ohwr.org/CERNOHL). This documentation is dristributed WITHOUT ANY EXPRESS OR IMPLIED WARRANTY, INCLUDING OF MERCHANTABLITY, SATISFACTORY QUALITY AND FITNESS FOR A PARTICULAR PURPOSE. Please see the CERN OHL v.1.1 for applicable conditions

Project/Equipment	AMC FMC Carrier
Document	**AMC FMC Carrier v4 MMC**
Designer	T. Przywozki
Drawn by	XX/XX/XXXX
Check.by	-
Last Mod.	F. Świtakowski 27.11.2024
File	CPU.SchDoc
Print Date	24.10.2025 13:06:38
Sheet	18 of 29
Size	A3
Rev	1

Warsaw University of Technology
Nowowiejska 15/19 00-665 Warsaw
ISE
Contact: t.przywozki@gmail.com

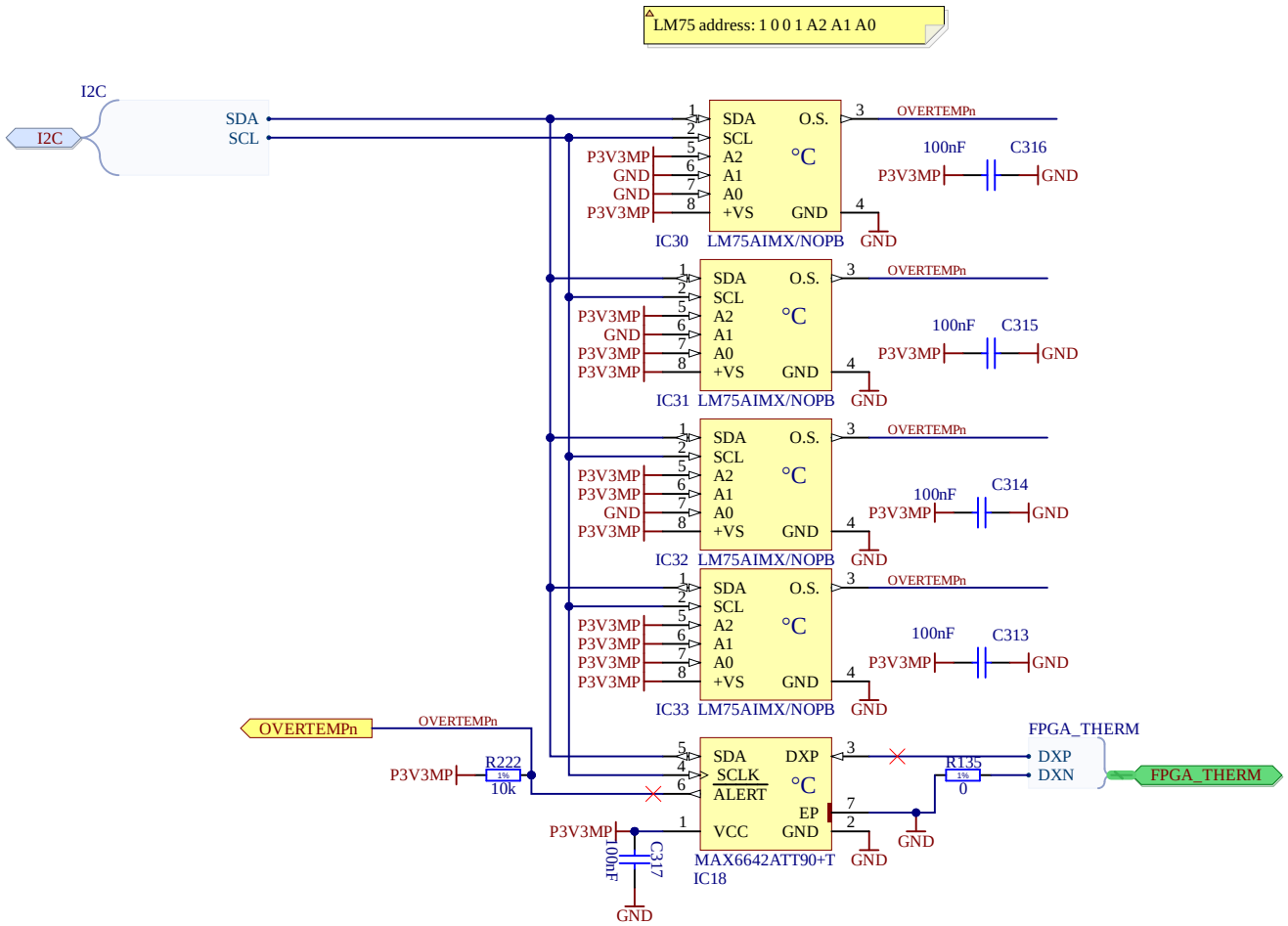

Copyright CNPEM 2013, WUT ISE 2020

This documentation describes Open Hardware and is licensed under CERN OHL v.1.1. You may redistribute and modify this documentaction under the terms of the CERN OHL v1.1. (http://ohwr.org/CERNOHL). This documentation is distributed WITHOUT ANY EXPRESS OR IMPLIED WARRANTY, INCLUDING OF MERCHANTABLITY, SATISFACTORY QUALITY AND FITNESS FOR A PARTICULAR PURPOSE. Please see the CERN OHL v.1.1 for applicable conditions

Project/Equipment	AMC FMC Carrier		
Document	**AMC FMC Carrier v4 Thermometers**	Designer	T. Przywozki
		Drawn by	XX/XX/XXXX
		Check.by	-
		Last Mod.	F. Świtakowski 14.11.2024
		File	Thermometers.SchDoc
		Print Date	24.10.2025 13:06:38
		Sheet	19 of 29

Warsaw University of Technology
Nowowiejska 15/19 00-665 Warsaw
ISE
Contact: t.przywozki@gmail.com

Size A4 Rev 1

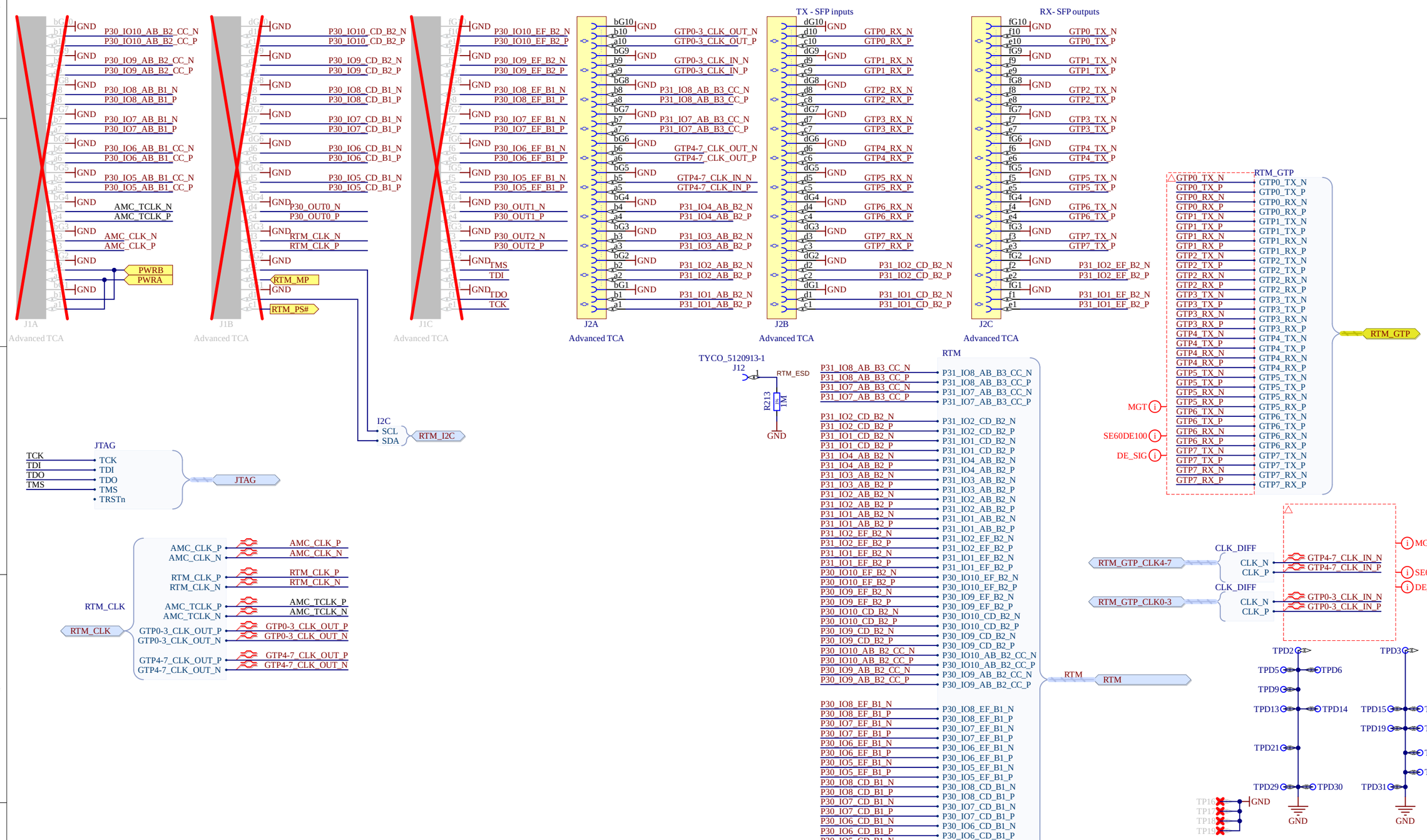

Copyright CNPEM 2013, WUT ISE 2020

This documentation describes Open Hardware and is licensed under CERN OHL v.1.1. You may redistribute and modify this documentaction under the terms of the CERN OHL v1.1. (http://ohwr.org/CERNOHL). This documentation is dristributed WITHOUT ANY EXPRESS OR IMPLIED WARRANTY, INCLUDING OF MERCHANTABLITY, SATISFACTORY QUALITY AND FITNESS FOR A PARTICULAR PURPOSE. Please see the CERN OHL v.1.1 for applicable conditions

Project/Equipment	AMC FMC Carrier		
Document	**AMC FMC Carrier v4 RTM Connector**	Designer	T. Przywozki
		Drawn by	XX/XX/XXXX
		Check.by	-
		Last Mod.	F. Świtakowski 16.01.2025
		File	RTM_CON.SchDoc
		Print Date	24.10.2025 13:06:38
		Sheet	20 of 29

Warsaw University of Technology
Nowowiejska 15/19 00-665 Warsaw
ISE
Contact: t.przywozki@gmail.com

Size A3 Rev 1

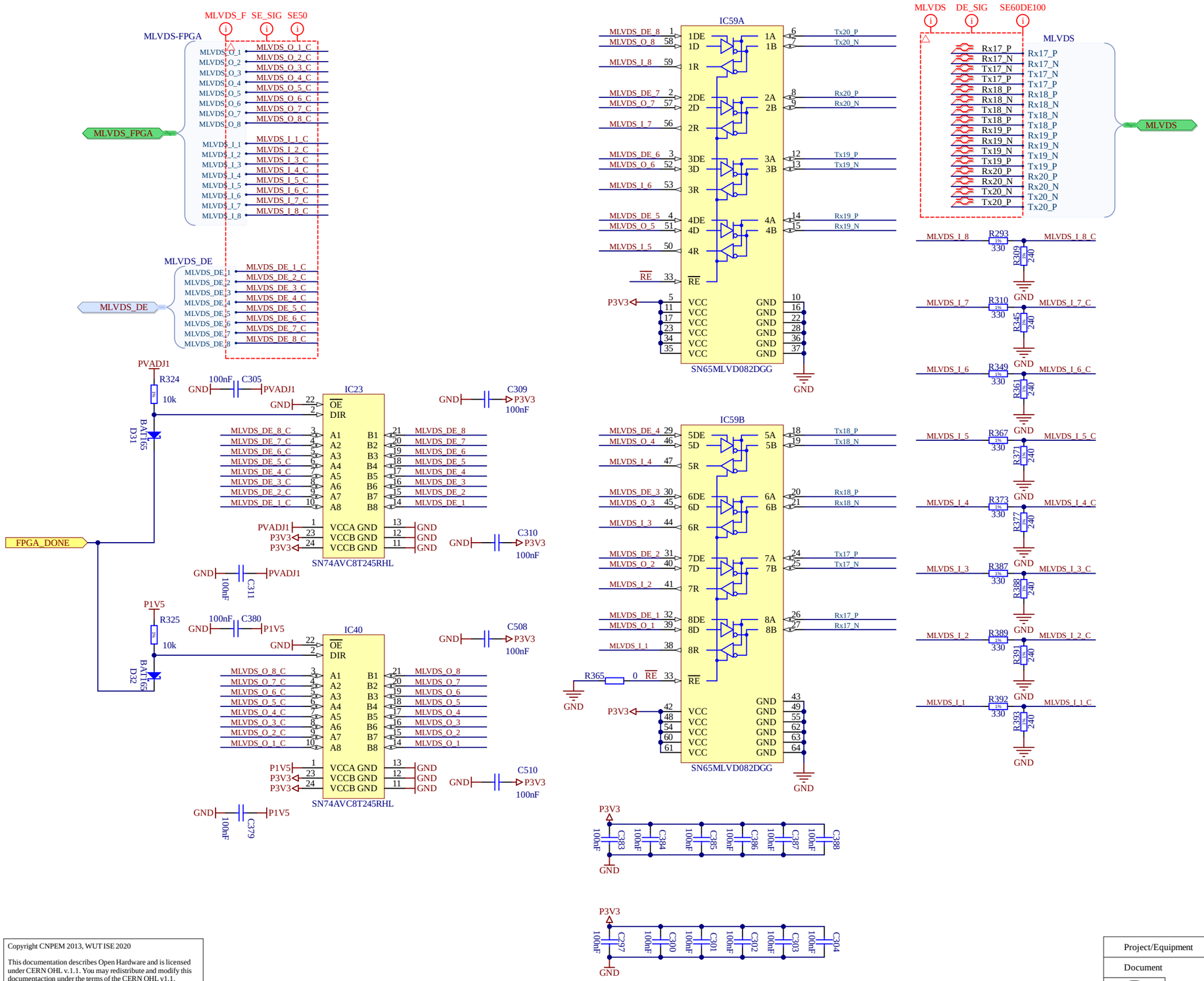

Copyright CNPEM 2013, WUT ISE 2020

This documentation describes Open Hardware and is licensed under CERN OHL v.1.1. You may redistribute and modify this documentaction under the terms of the CERN OHL v1.1. (http://ohwr.org/CERNOHL). This documentation is dristributed WITHOUT ANY EXPRESS OR IMPLIED WARRANTY, INCLUDING OF MERCHANTABLITY, SATISFACTORY QUALITY AND FITNESS FOR A PARTICULAR PURPOSE. Please see the CERN OHL v.1.1 for applicable conditions

Project/Equipment	AMC FMC Carrier		
Document	**AMC FMC Carrier v4 M-LVDS PHY**	Designer	T. Przywozki
		Drawn by	XX/XX/XXXX
		Check.by	-
		Last Mod.	F. Switakowski 14.11.2024
		File	M-LVDS PHY.SchDoc
		Print Date	24.10.2025 13:06:38
		Sheet	21 of 29

Warsaw University of Technology
Nowowiejska 15/19 00-665 Warsaw
ISE
Contact: t.przywozki@gmail.com

Size A3 | Rev 1

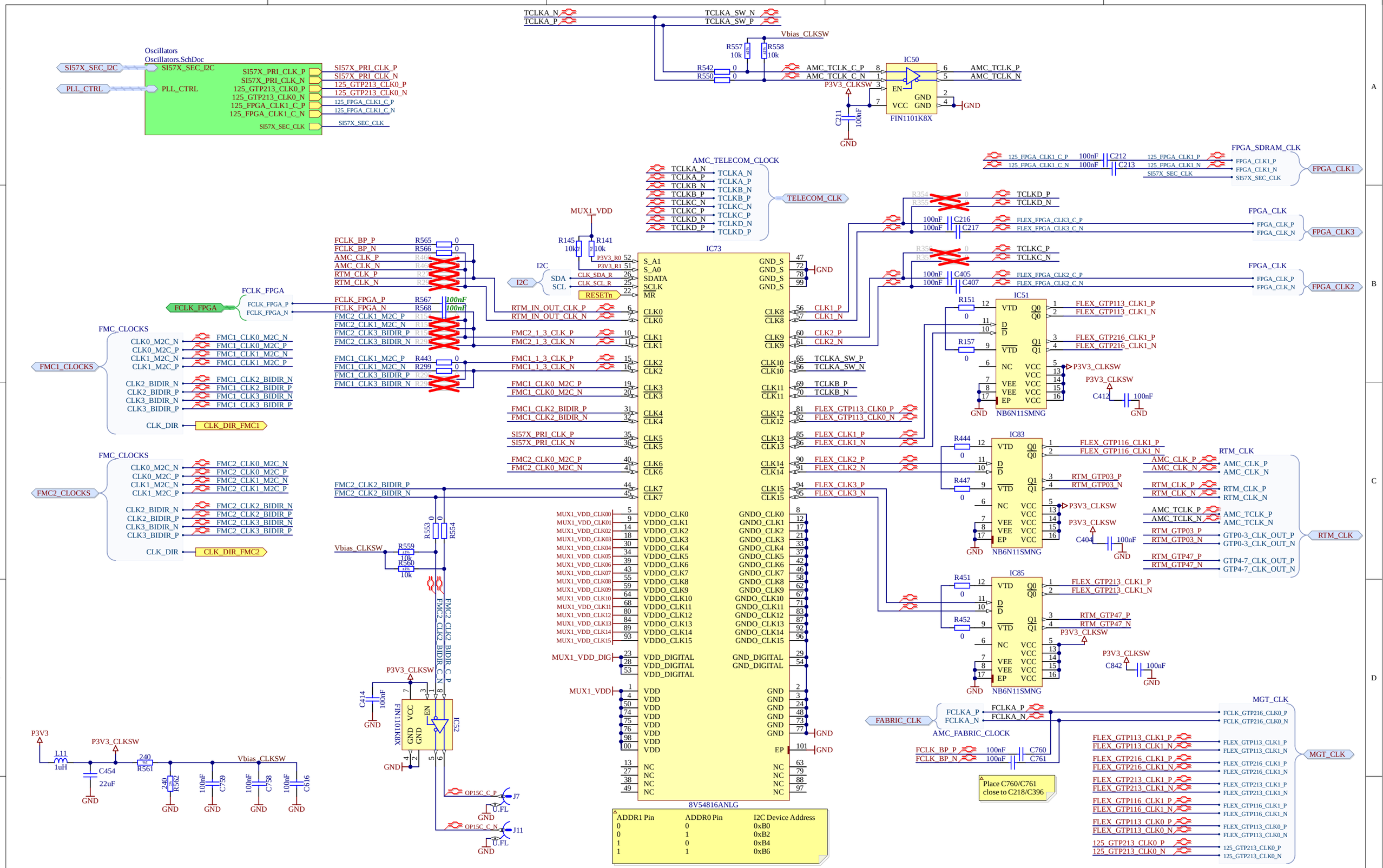

Copyright CNPEM 2013, WUT ISE 2020

This documentation describes Open Hardware and is licensed under CERN OHL v.1.1. You may redistribute and modify this documentaction under the terms of the CERN OHL v1.1. (http://ohwr.org/CERNOHL). This documentation is dristributed WITHOUT ANY EXPRESS OR IMPLIED WARRANTY, INCLUDING OF MERCHANTABLITY, SATISFACTORY QUALITY AND FITNESS FOR A PARTICULAR PURPOSE. Please see the CERN OHL v.1.1 for applicable conditions

Designator
8V54816A_SUPPLY.SchDoc

Project/Equipment: AMC FMC Carrier

Document

AMC FMC Carrier v4
Clock Management

Warsaw University of Technology
Nowowiejska 15/19 00-665 Warsaw
ISE

Contact: t.przywozki@gmail.com

Designer	T. Przywozki
Drawn by	XX/XX/XXXX
Check.by	-
Last Mod.	M. Biernat 27.11.2024
File	Clock_management.SchDoc
Print Date	24.10.2025 13:06:38
Sheet	22 of 29
Size	A3
Rev	1

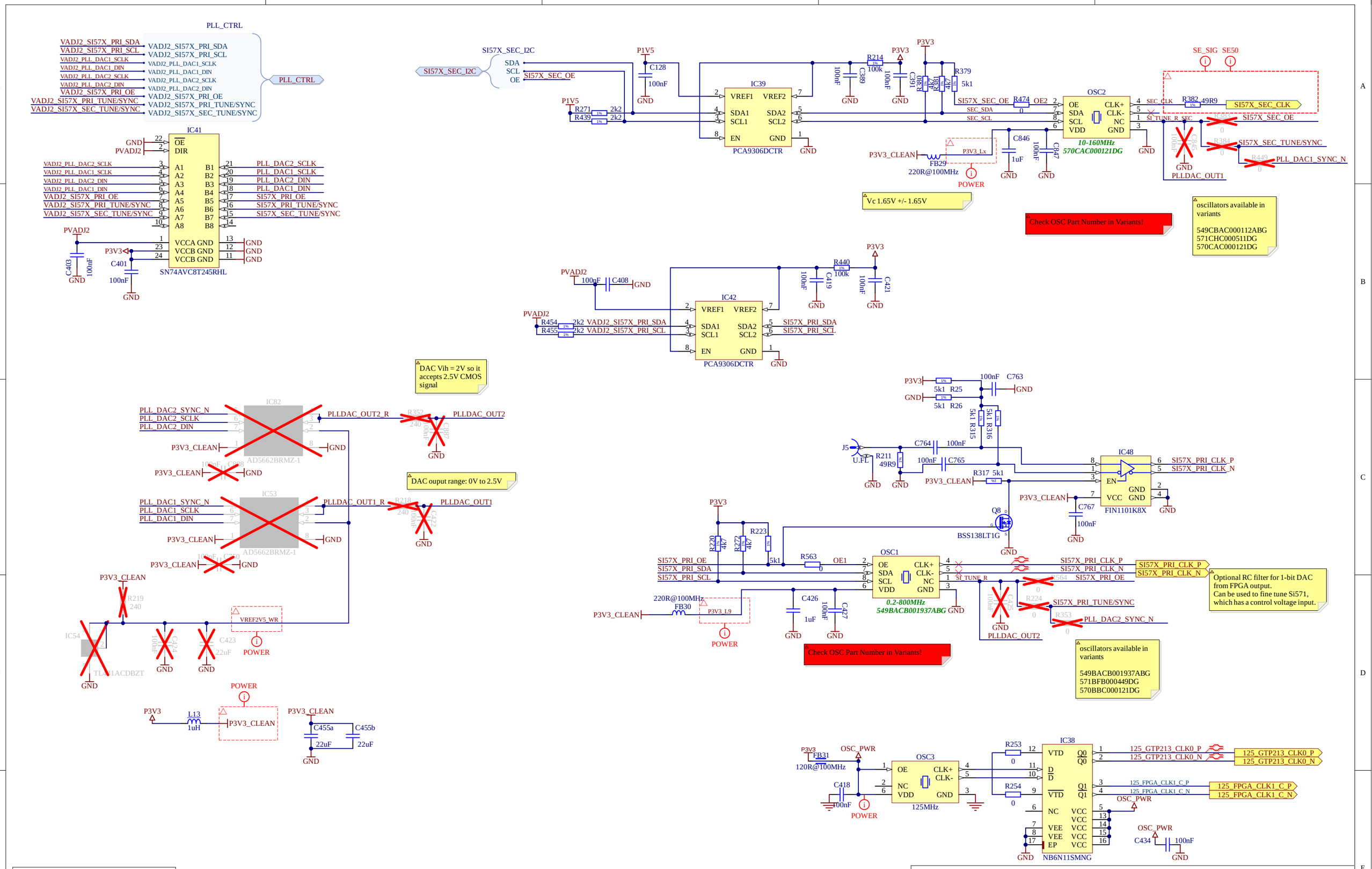

Copyright CNPEM 2013, WUT ISE 2020

This documentation describes Open Hardware and is licensed under CERN OHL v.1.1. You may redistribute and modify this documentaction under the terms of the CERN OHL v1.1. (http://ohwr.org/CERNOHL). This documentation is dristributed WITHOUT ANY EXPRESS OR IMPLIED WARRANTY, INCLUDING OF MERCHANTABLITY, SATISFACTORY QUALITY AND FITNESS FOR A PARTICULAR PURPOSE. Please see the CERN OHL v.1.1 for applicable conditions

Project/Equipment: AMC FMC Carrier

Document: **AMC FMC Carrier v4 Oscillators**

Designer	T. Przywozki	
Drawn by		XX/XX/XXXX
Check.by		-
Last Mod.	F. Świtakowski	24.10.2025
File	Oscillators.SchDoc	
Print Date	24.10.2025 13:06:39	Sheet 23 of 29

Warsaw University of Technology
Nowowiejska 15/19 00-665 Warsaw
ISE
Contact: t.przywozki@gmail.com

Size A3 Rev 1

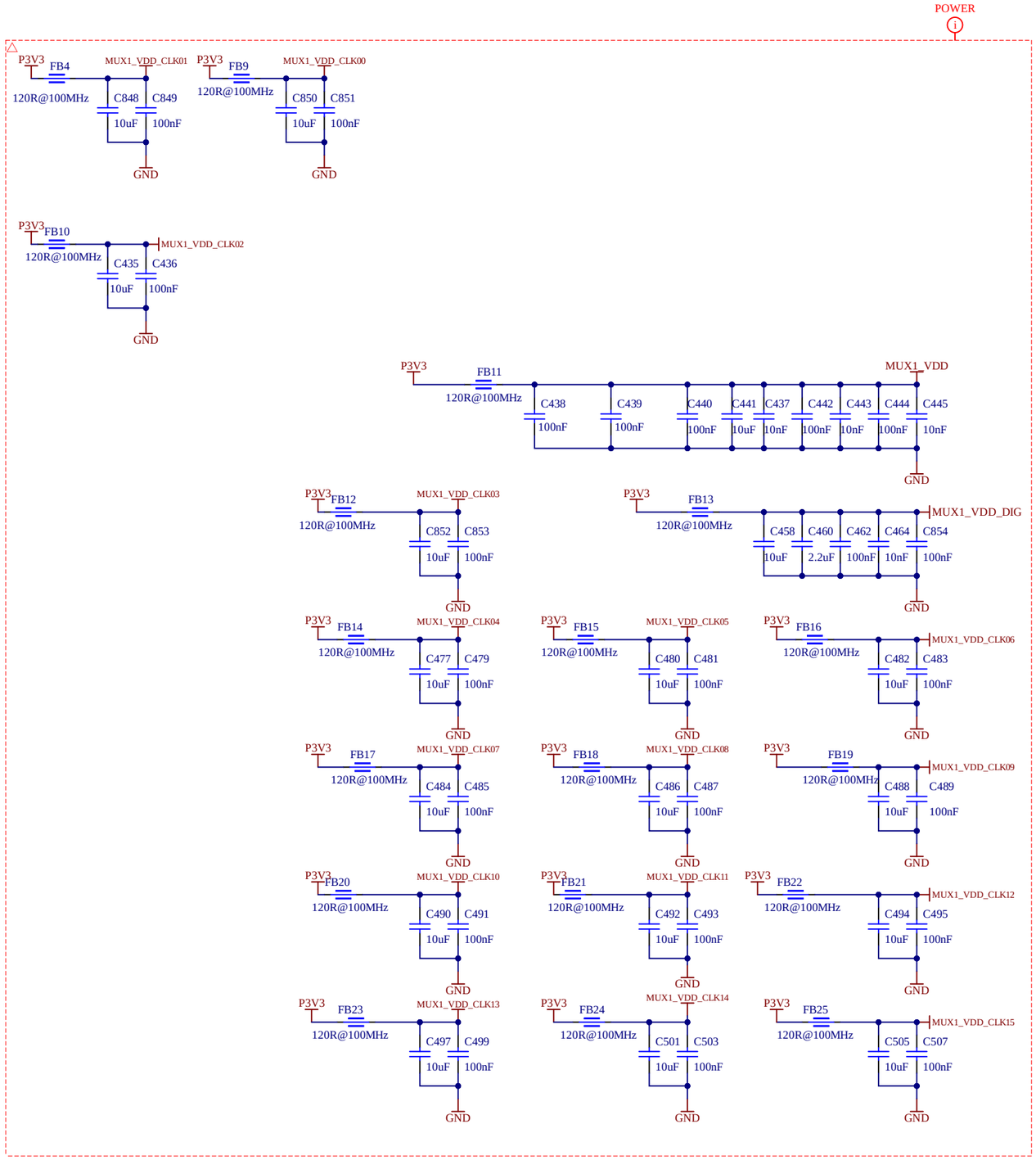

Copyright CNPEM 2013, WUT ISE 2020

This documentation describes Open Hardware and is licensed under CERN OHL v.1.1. You may redistribute and modify this documentation under the terms of the CERN OHL v1.1. (http://ohwr.org/CERNOHL). This documentation is dristributed WITHOUT ANY EXPRESS OR IMPLIED WARRANTY, INCLUDING OF MERCHANTABLITY, SATISFACTORY QUALITY AND FITNESS FOR A PARTICULAR PURPOSE. Please see the CERN OHL v.1.1 for applicable conditions

Project/Equipment	AMC FMC Carrier		
Document	**AMC FMC Carrier v4 8V54816A Supply**	Designer	T. Przywozki
		Drawn by	XX/XX/XXXX
		Check.by	-
		Last Mod.	F. Świtakowski 14.11.2024
		File	8V54816A_SUPPLY.SchDoc
		Print Date	24.10.2025 13:06:39 Sheet 24 of 29

Warsaw University of Technology
Nowowiejska 15/19 00-665 Warsaw
ISE
Contact: t.przywozki@gmail.com

Size A3 Rev 1

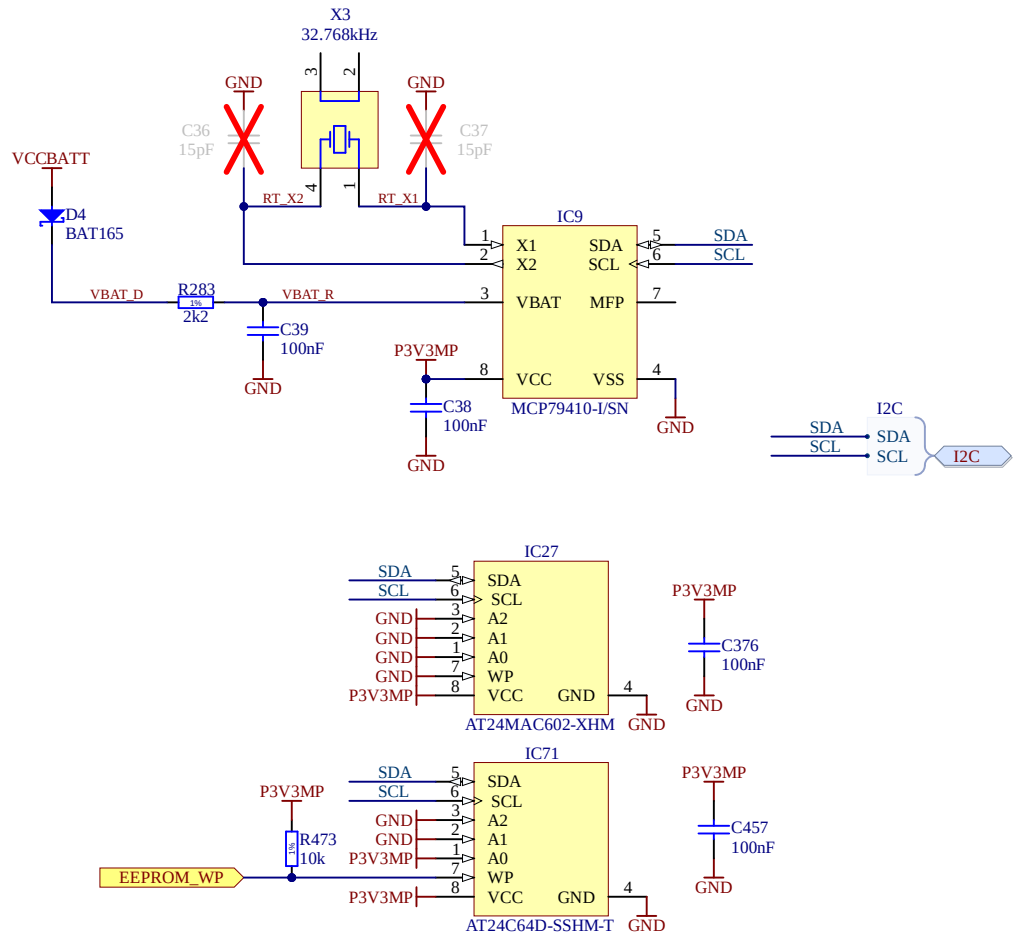

Copyright CNPEM 2013, WUT ISE 2020

This documentation describes Open Hardware and is licensed under CERN OHL v.1.1. You may redistribute and modify this documentaction under the terms of the CERN OHL v1.1. (http://ohwr.org/CERNOHL). This documentation is dristributed WITHOUT ANY EXPRESS OR IMPLIED WARRANTY, INCLUDING OF MERCHANTABLITY, SATISFACTORY QUALITY AND FITNESS FOR A PARTICULAR PURPOSE. Please see the CERN OHL v.1.1 for applicable conditions

Project/Equipment	AMC FMC Carrier		
Document	**AMC FMC Carrier v4 RTCE & EEPROM**	Designer	T. Przywozki
		Drawn by	XX/XX/XXXX
		Check.by	-
		Last Mod.	F. Świtakowski 14.11.2024
		File	RTCE.SchDoc
		Print Date	24.10.2025 13:06:39
		Sheet	26 of 29

Warsaw University of Technology
Nowowiejska 15/19 00-665 Warsaw
ISE
Contact: t.przywozki@gmail.com

Size A4 | Rev 1

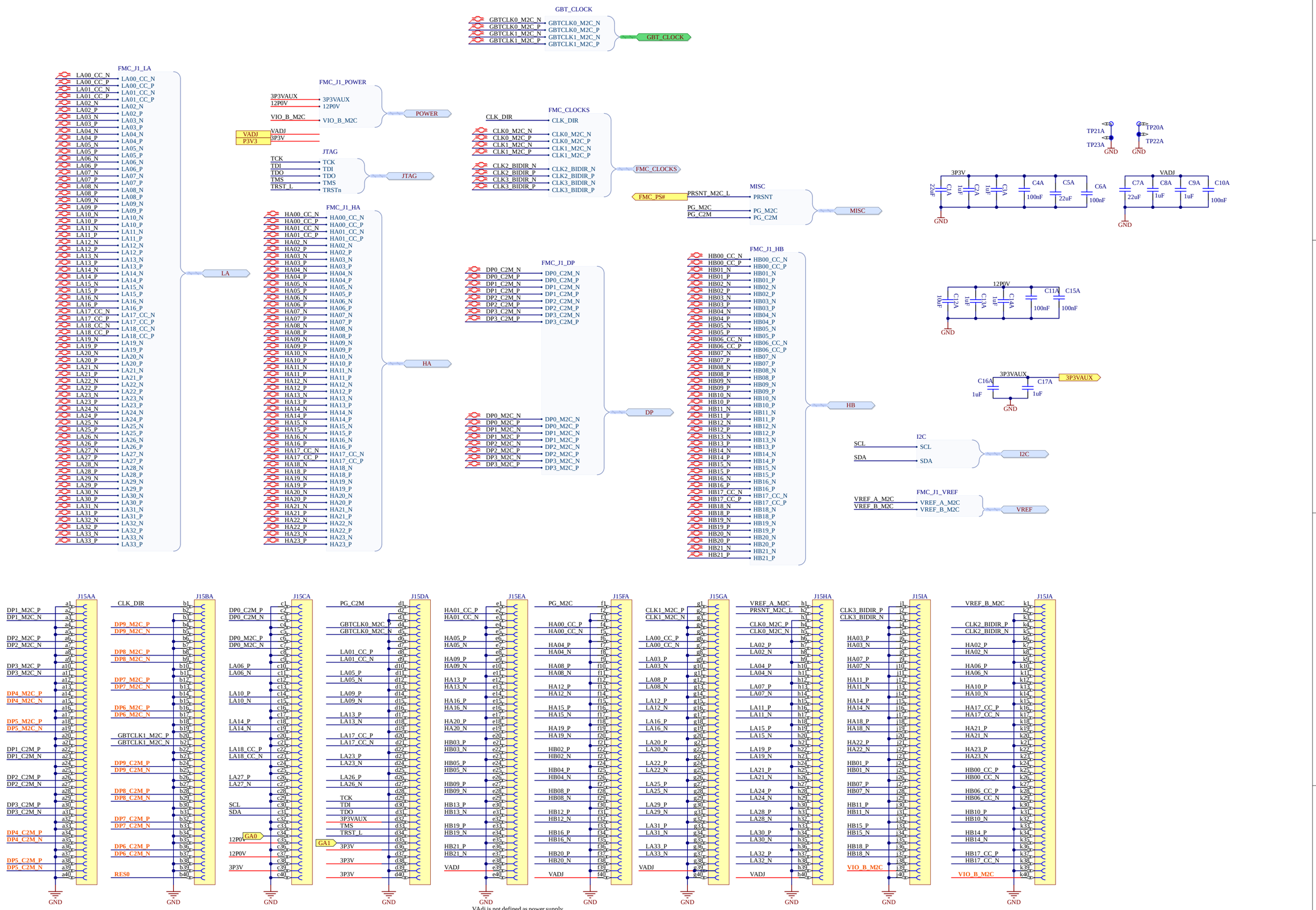

Copyright CNPEM 2013, WUT ISE 2020

This documentation describes Open Hardware and is licensed under CERN OHL v.1.1. You may redistribute and modify this documentacion under the terms of the CERN OHL v1.1. (http://ohwr.org/CERNOHL). This documentation is distributed WITHOUT ANY EXPRESS OR IMPLIED WARRANTY, INCLUDING OF MERCHANTABLITY, SATISFACTORY QUALITY AND FITNESS FOR A PARTICULAR PURPOSE. Please see the CERN OHL v.1.1 for applicable conditions

Project/Equipment	AMC FMC Carrier		
Document	**AMC FMC Carrier v4 FMC connector**	Designer T. Przywozki	
		Drawn by	XX/XX/XXXX
		Check by	-
		Last Mod. F. Świtakowski	27.11.2024
		File FMC_connector.SchDoc	
		Print Date 24.10.2025 13:06:39	Sheet 27 of 29
Warsaw University of Technology Nowowiejska 15/19 00-665 Warsaw	ISE	Contact: t.przywozki@gmail.com	Size A2 / Rev 1

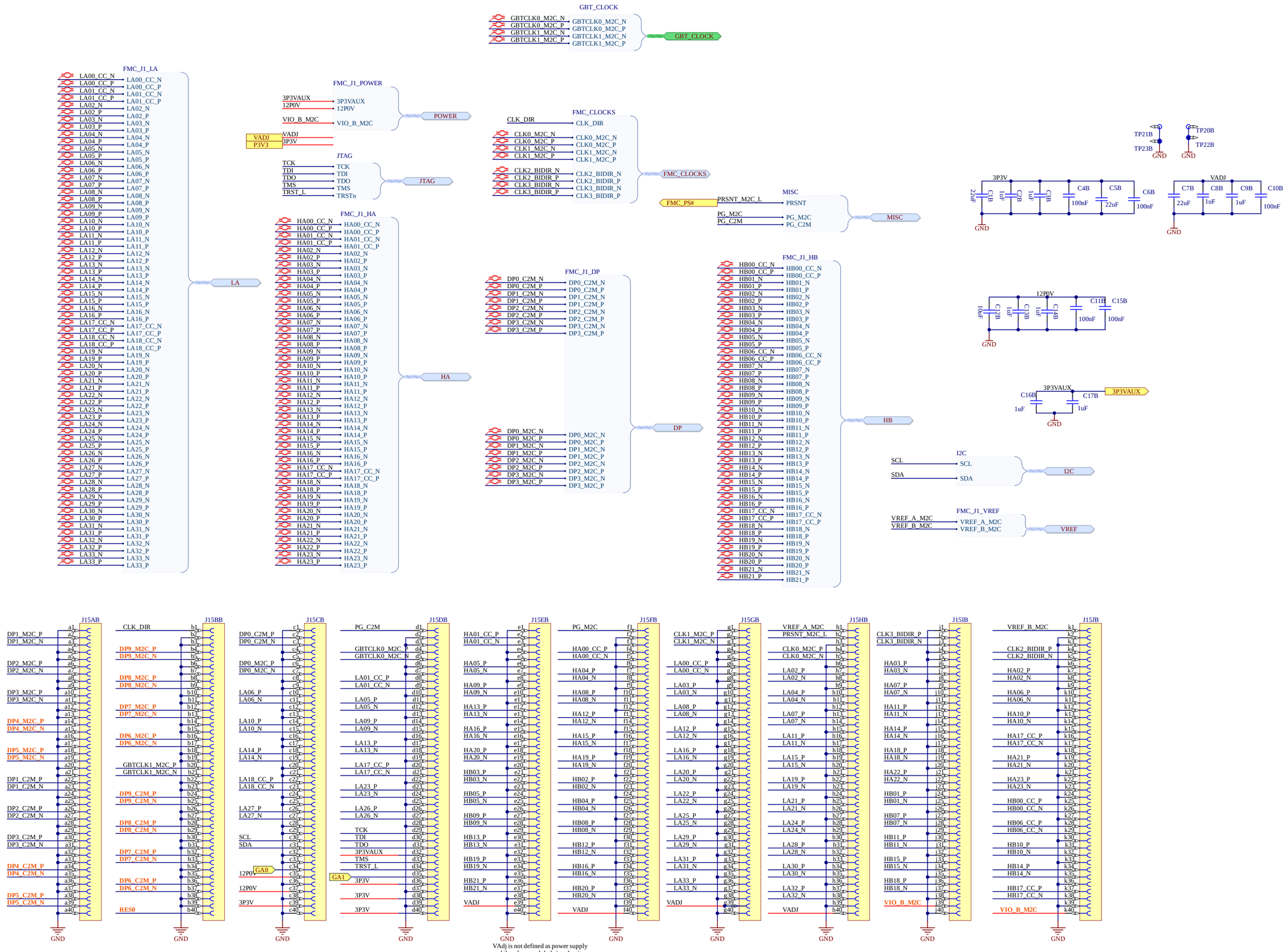

Copyright CNPEM 2013, WUT ISE 2020

This documentation describes Open Hardware and is licensed under CERN OHL v.1.1. You may redistribute and modify this documentacion under the terms of the CERN OHL v1.1. (http://ohwr.org/CERNOHL). This documentation is distributed WITHOUT ANY EXPRESS OR IMPLIED WARRANTY, INCLUDING OF MERCHANTABLITY, SATISFACTORY QUALITY AND FITNESS FOR A PARTICULAR PURPOSE. Please see the CERN OHL v.1.1 for applicable conditions

Project/Equipment: AMC FMC Carrier

Document: **AMC FMC Carrier v4 FMC connector**

Designer	T. Przywozki	
Drawn by		XX/XX/XXXX
Check by		-
Last Mod.	F. Switakowski	27.11.2024
File	FMC_connector.SchDoc	
Print Date	24.10.2025 13:06:40	Sheet 27 of 29

Warsaw University of Technology
Nowowiejska 15/19 00-665 Warsaw
ISE
Contact: t.przywozki@gmail.com

Size A2 | Rev 1

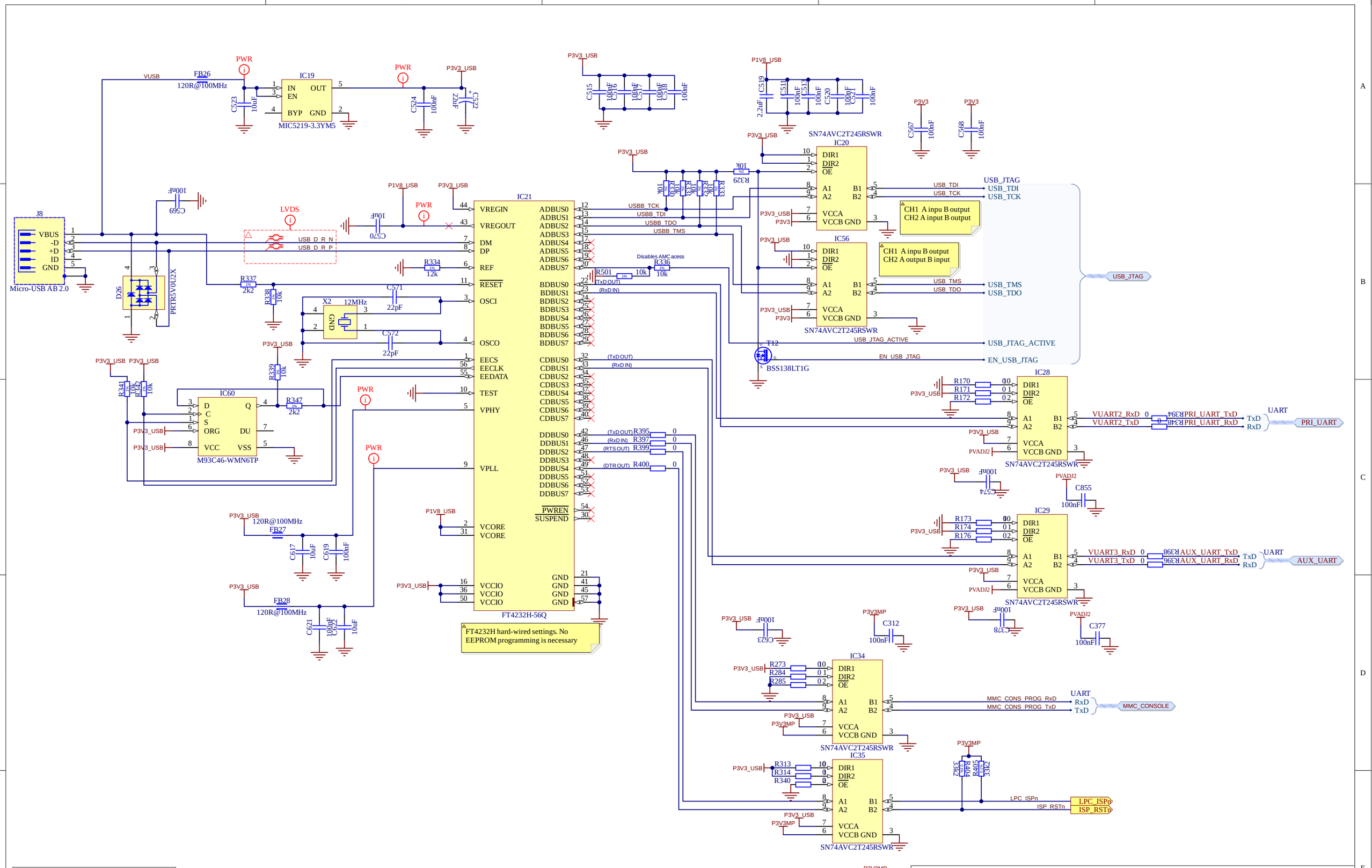

Copyright CNPEM 2013, WUT ISE 2020

This documentation describes Open Hardware and is licensed under CERN OHL v.1.1. You may redistribute and modify this documentation under the terms of the CERN OHL v1.1. (http://ohwr.org/CERNOHL). This documentation is dristributed WITHOUT ANY EXPRESS OR IMPLIED WARRANTY, INCLUDING OF MERCHANTABLITY, SATISFACTORY QUALITY AND FITNESS FOR A PARTICULAR PURPOSE. Please see the CERN OHL v.1.1 for applicable conditions

Project/Equipment: AMC FMC Carrier

Document: **AMC FMC Carrier v4 Quad USB - serial**

Designer	T. Przywozki
Drawn by	XX/XX/XXXX
Check.by	-
Last Mod.	F. Świtakowski 27.11.2024
File	USB_SERIAL_QUAD.SchDoc
Print Date	24.10.2025 13:06:40
Sheet	28 of 29
Size	A3
Rev	1

Warsaw University of Technology
Nowowiejska 15/19 00-665 Warsaw
ISE
Contact: t.przywozki@gmail.com

I2C switch footprint is compatible with MAX7358 which has interesting anti-lock capabilities

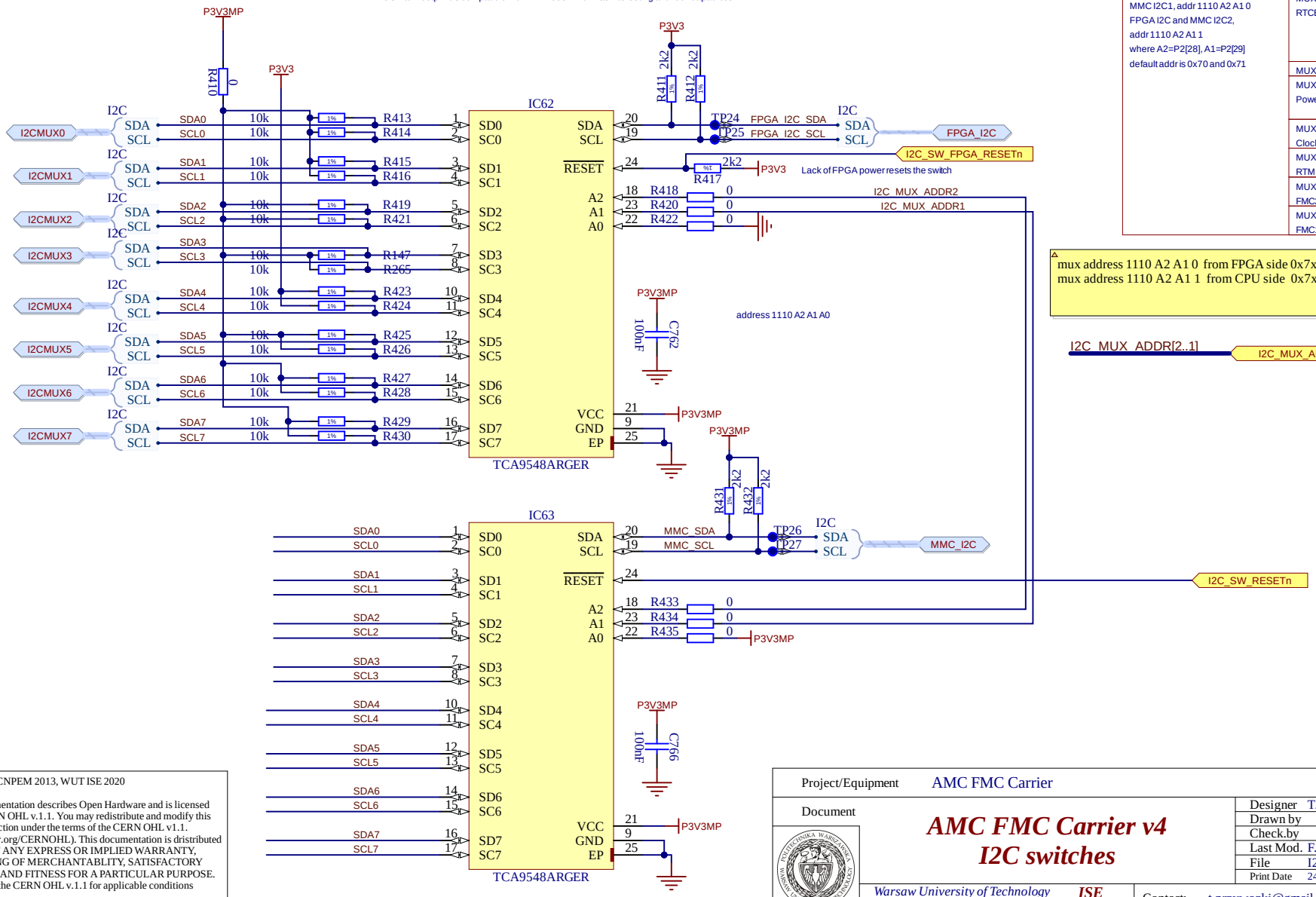

I2C device address map		
The resources are available from TCA9548s SW: MMC I2C1, addr 1110 A2 A1 0 FPGA I2C and MMC I2C2, addr 1110 A2 A1 1 where A2=P2[28], A1=P2[29] default addr is 0x70 and 0x71	MUX Port 0 Temp sensors	MAX6642 0x48 LM75: 0x4C LM75: 0x4D LM75: 0x4E LM75: 0x4F
	MUX Port 1 RTCE	RTC EEPROM: 0x57 SRAM/RTCC reg: 0x6F EEPROM 2k: 0x50 EUI-ID: 0x59 EEPROM 64k: 0x51
	MUX Port 2	
	MUX Port 3 Power	INA3221AIRGV: 0x40 INA3221AIRGV: 0x41 INA3221AIRGV: 0x42
	MUX Port 4 Clock switch	8V54816ANLG: 0x5B
	MUX Port 5 RTM	RTM devices
	MUX Port 6 FMC2	EEPROM 0x52
	MUX Port 7 FMC1	EEPROM 0x50

mux address 1110 A2 A1 0 from FPGA side 0x7x
mux address 1110 A2 A1 1 from CPU side 0x7x

I2C_MUX_ADDR[2..1] — I2C_MUX_ADDR[2..1]

Copyright CNPEM 2013, WUT ISE 2020

This documentation describes Open Hardware and is licensed under CERN OHL v.1.1. You may redistribute and modify this documentaction under the terms of the CERN OHL v1.1. (http://ohwr.org/CERNOHL). This documentation is distributed WITHOUT ANY EXPRESS OR IMPLIED WARRANTY, INCLUDING OF MERCHANTABLITY, SATISFACTORY QUALITY AND FITNESS FOR A PARTICULAR PURPOSE. Please see the CERN OHL v.1.1 for applicable conditions

Project/Equipment: AMC FMC Carrier

Document

AMC FMC Carrier v4
I2C switches

Designer	T. Przywozki	
Drawn by		XX/XX/XXXX
Check.by		-
Last Mod.	F. Świtakowski	14.11.2024
File	I2C_MUX.SchDoc	
Print Date	24.10.2025 13:06:40	Sheet 29 of 29

Warsaw University of Technology ISE
Nowowiejska 15/19 00-665 Warsaw
Contact: t.przywozki@gmail.com

Size A4 Rev 1